# فهرست سیستم های درب و پنجره لیفت اند اسلاید و کشویی بندینی


**LST135 ..... 2-29**

**BST108 ..... 30-31**

**BST90 ..... 32-44**

**YST77 ..... 45-59**

**YSN75 ..... 60-77**

**YSN60 ..... 78-94**

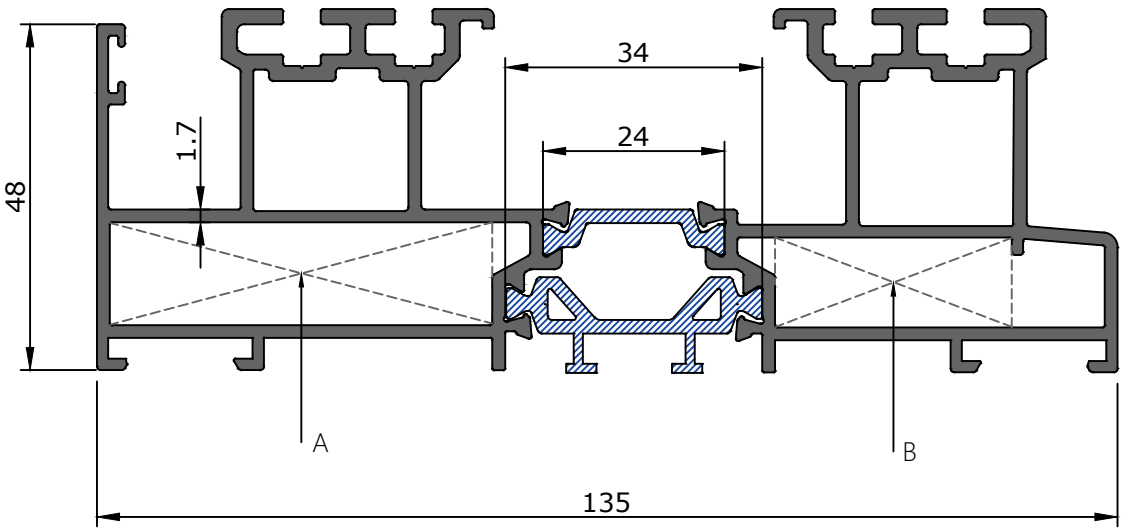


| Profile Name | Profile Code | Weight (Kg/m) |
|---|---|---|
| Frame Profile | 42001 | 2.973 |

| Corner Cleat | A | B |
|---|---|---|
| 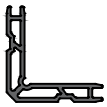 | 308-10<br>50.2mm | 306-1<br>30.9mm |

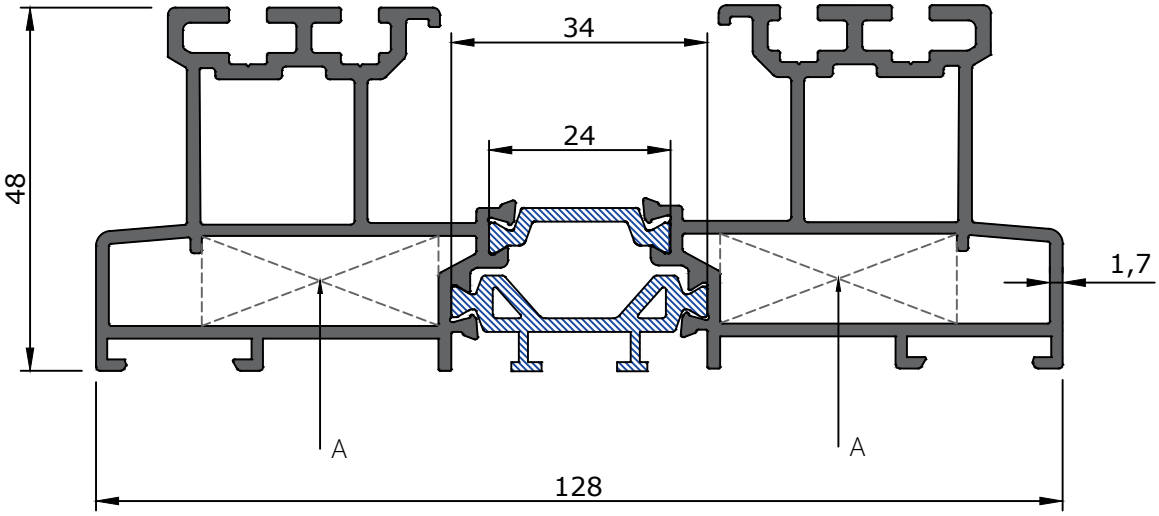


| Profile Name | Profile Code | Weight (Kg/m) |
|---|---|---|
| Frame Profile | 42002 | 2.801 |

| Corner Cleat | A |
|---|---|
| 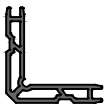 | 306-1<br>30.9mm |

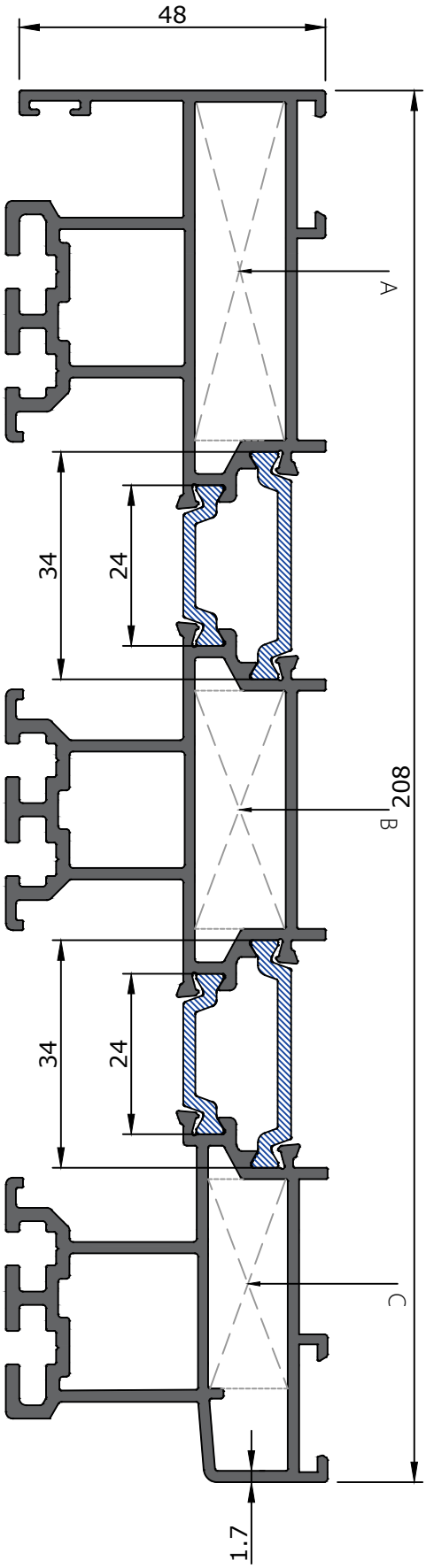


| Profile Name | Profile Code | Weight (Kg/m) |
|---|---|---|
| Frame Profile | 42003 | 4.500 |

| Corner Cleat | A | B | C |
|---|---|---|---|
| 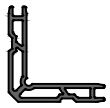 | 308-10<br>50.2mm | 308-15<br>35.2mm | 306-1<br>30.9mm |

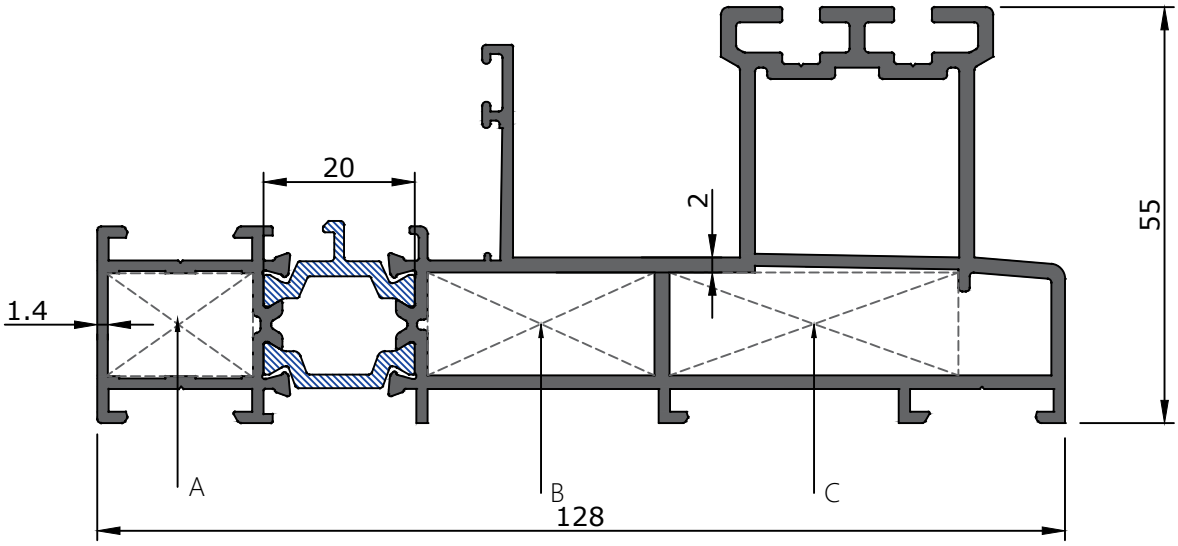


| Profile Name | Profile Code | Weight (Kg/m) |
|---|---|---|
| Frame Profile | 42004 | 2.485 |

| Corner Cleat | A | B | C |
|---|---|---|---|
| 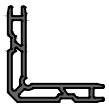 | 308-2<br>18.8mm | 308-6<br>29.6mm | 308-5<br>37.8mm |

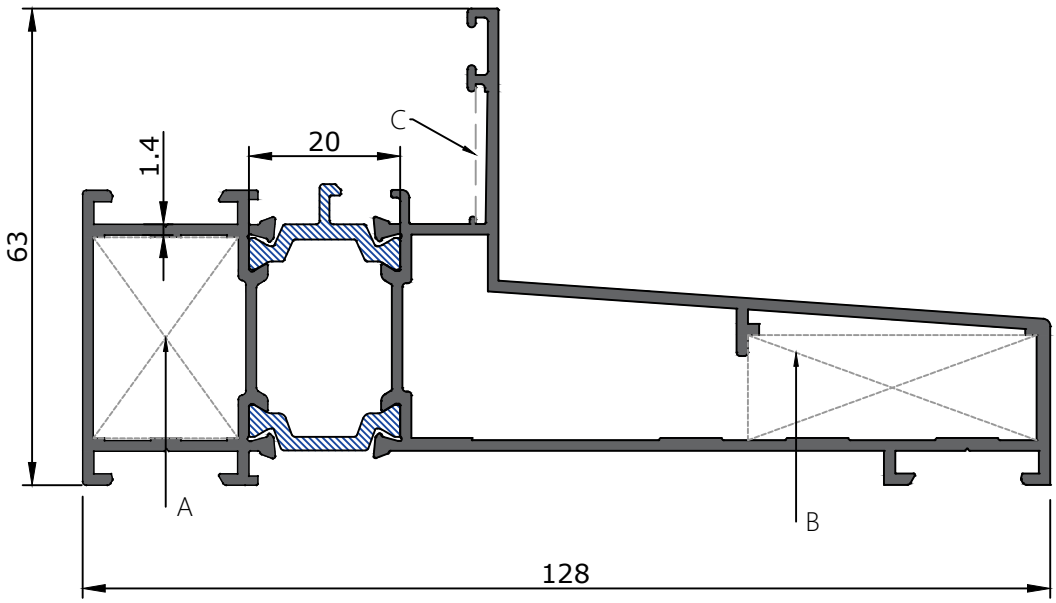


| Profile Name | Profile Code | Weight (Kg/m) |
|---|---|---|
| Frame Profile | 42012 | 1.896 |

| Corner Cleat | A | B | C |
|---|---|---|---|
| 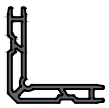 | 311-3<br>18.8mm | 308-5<br>37.8mm | 21326 |

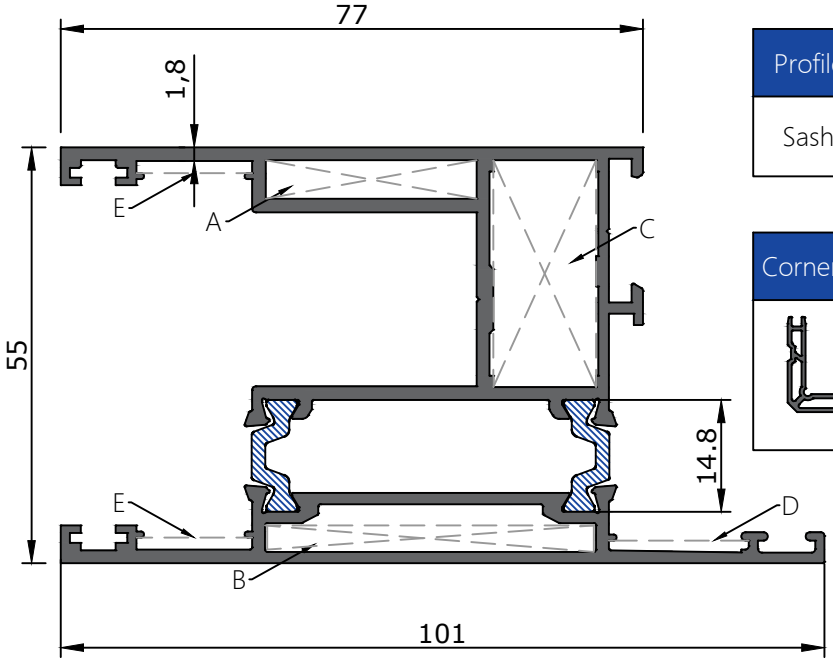


| Profile Name | Profile Code | Weight (Kg/m) |
|---|---|---|
| Sash Profile | 42008 | 2.061 |

| Corner Cleat | A | B | C |
|---|---|---|---|
| 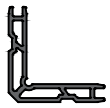 | 318-1<br>4.7mm | 316-2<br>3.4mm | 308-6<br>29.6mm |

| Corner Cleat | D | E |
|---|---|---|
| 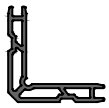 | 21326 | 21325 |

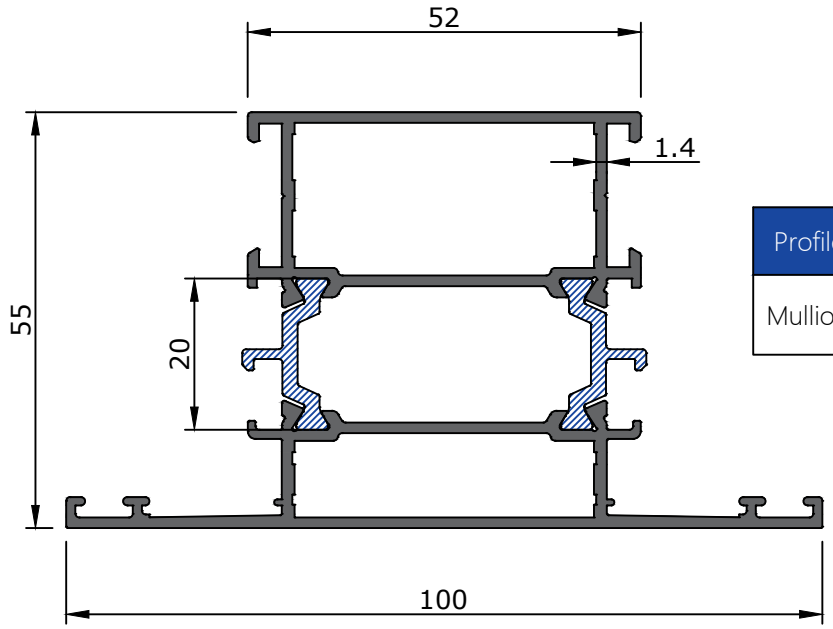


| Profile Name | Profile Code | Weight (Kg/m) |
|---|---|---|
| Mullion Profile | 42017 | 1.580 |

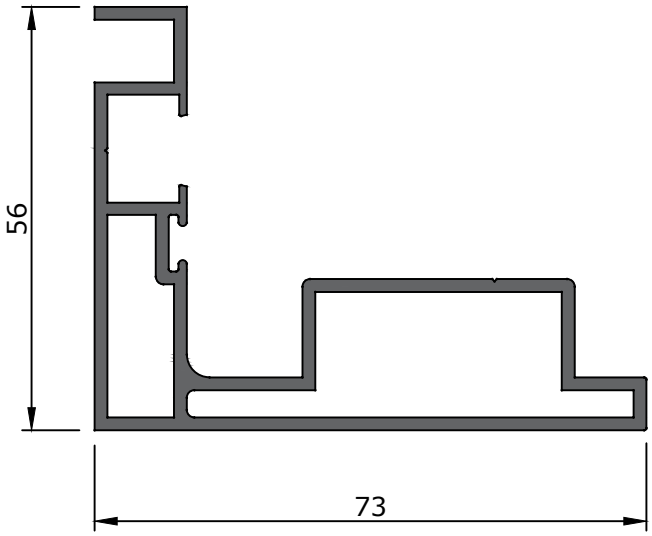


| Profile Name | Profile Code | Weight (Kg/m) |
|---|---|---|
| Adaptor For Sash | 42048 | 1.298 |

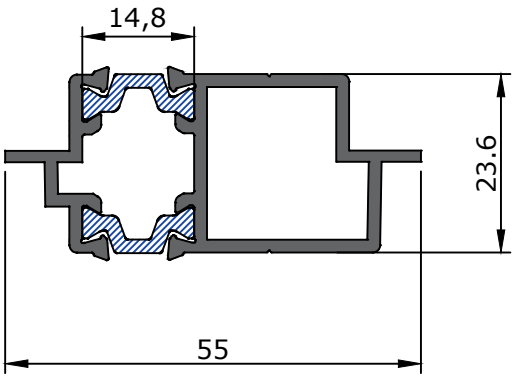


| Profile Name | Profile Code | Weight (Kg/m) |
|---|---|---|
| Locking Profile | 42049 | 0.794 |

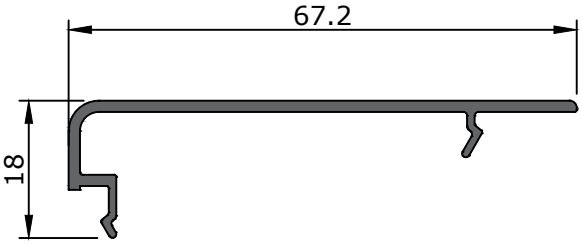


| Profile Name | Profile Code | Weight (Kg/m) |
|---|---|---|
| Cover Sash | 42045 | 0.336 |

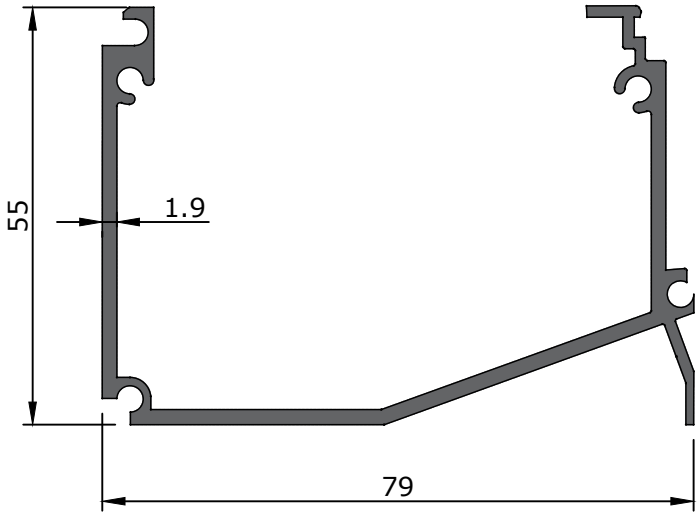


| Profile Name | Profile Code | Weight (Kg/m) |
|---|---|---|
| Guter Profile | 42501 | 1.090 |

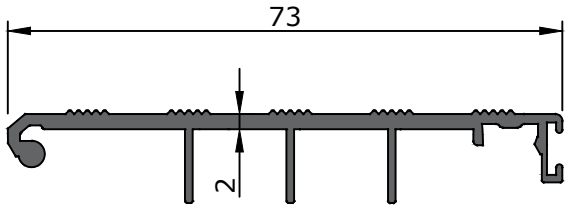


| Profile Name | Profile Code | Weight (Kg/m) |
|---|---|---|
| Cover Guter Profile | 42502 | 0.551 |

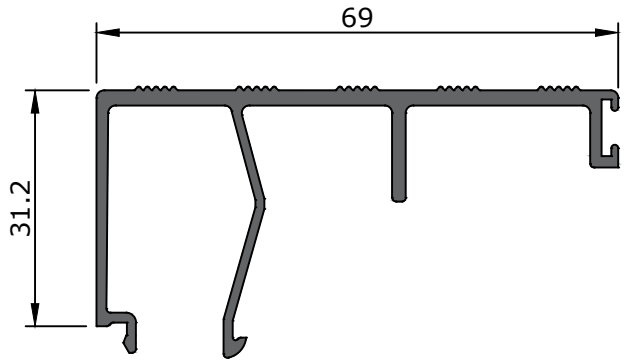


| Profile Name | Profile Code | Weight (Kg/m) |
|---|---|---|
| Cover Sash | 42046 | 0.748 |

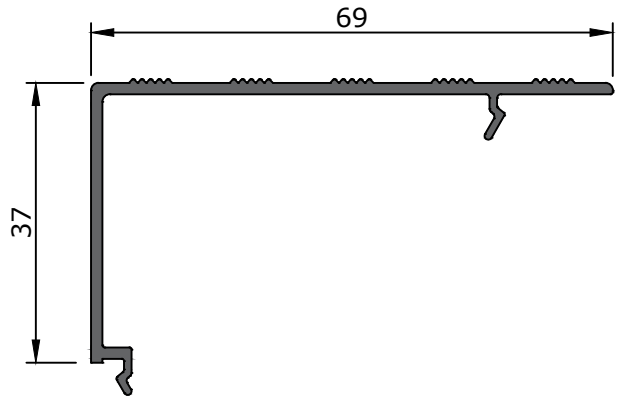


| Profile Name | Profile Code | Weight (Kg/m) |
|---|---|---|
| Cover Sash | 42047 | 0.493 |

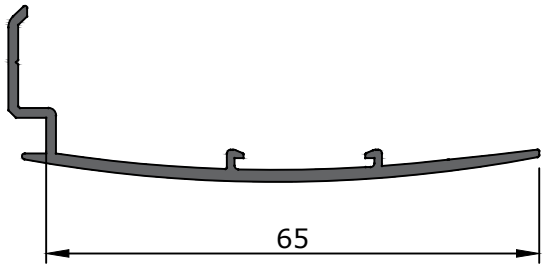


| Profile Name | Profile Code | Weight (Kg/m) |
|---|---|---|
| Border Profile | 21551 | 0.368 |

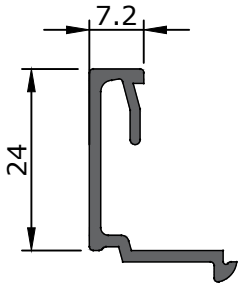


| Profile Name | Profile Code | Weight (Kg/m) |
|---|---|---|
| Glazing Bead | 21501 | 0.250 |

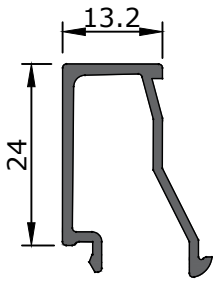


| Profile Name | Profile Code | Weight (Kg/m) |
|---|---|---|
| Glazing Bead | 21502 | 0.263 |

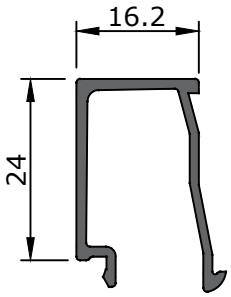


| Profile Name | Profile Code | Weight (Kg/m) |
|---|---|---|
| Glazing Bead | 21503 | 0.280 |

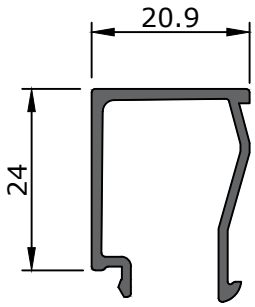


| Profile Name | Profile Code | Weight (Kg/m) |
|---|---|---|
| Glazing Bead | 21504 | 0.300 |

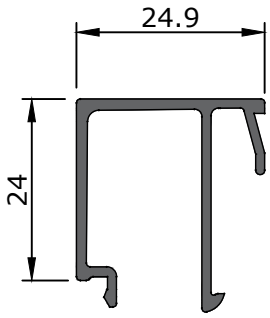


| Profile Name | Profile Code | Weight (Kg/m) |
|---|---|---|
| Glazing Bead | 21505 | 0.340 |

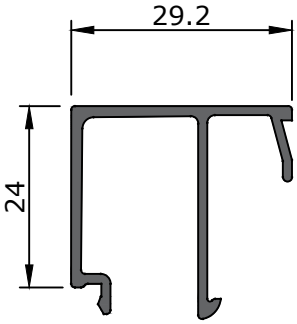


| Profile Name | Profile Code | Weight (Kg/m) |
|---|---|---|
| Glazing Bead | 21506 | 0.345 |

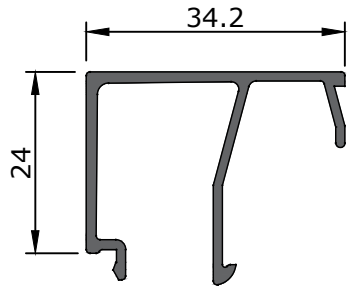


| Profile Name | Profile Code | Weight (Kg/m) |
|---|---|---|
| Glazing Bead | 21507 | 0.370 |

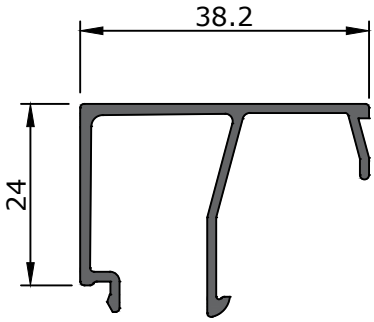


| Profile Name | Profile Code | Weight (Kg/m) |
|---|---|---|
| Glazing Bead | 21508 | 0.385 |

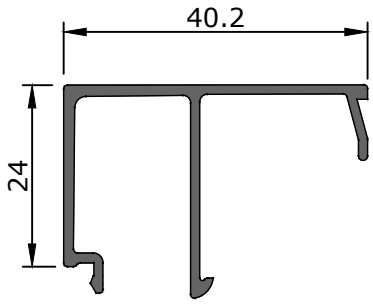


| Profile Name | Profile Code | Weight (Kg/m) |
|---|---|---|
| Glazing Bead | 21509 | 0.390 |

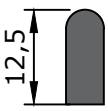


| Profile Name | Profile Code | Weight (Kg/m) |
|---|---|---|
| Rail Profile | 42306 | 0.170 |

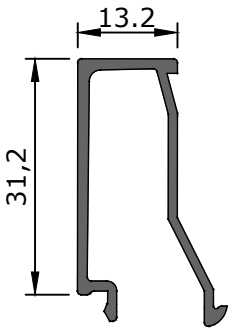


| Profile Name | Profile Code | Weight (Kg/m) |
|---|---|---|
| Glazing Bead | 21522 | 0.315 |

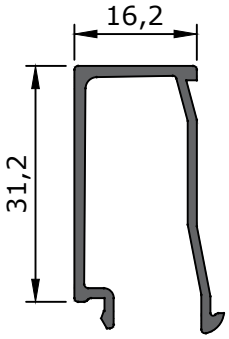


| Profile Name | Profile Code | Weight (Kg/m) |
|---|---|---|
| Glazing Bead | 21523 | 0.320 |

# ACCESSORIES

| Drawing | Code | Description | Material |
|---|---|---|---|
| | AP 020 | Sash Cover Profile Springy Top Cap | PVC |
| 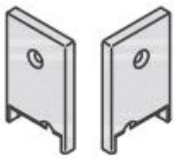 | AP 021 | Sash Cover Profile Fixed Bottom Cap | PVC |
| 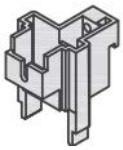 | AP 022 | Sash Top Left & Bottom Left Support | PVC |
| 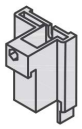 | AP 023 | Sash Top Right & Bottom Right Support | PVC |
| | AP 040 | Sash Adapter Profile Top | PVC |
| | AP 048 | Glazing Bearing Support | PVC |
| | AP 060 | Sash Stopper Support | PVC |
| 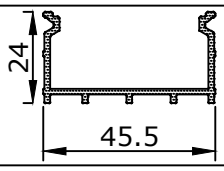  | P 421 | Central Channel Profile | PVC |
| 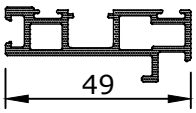  | P 422 | Central Cramp Profile | PVC |

# ACCESSORIES

| Drawing | Code | Description | Material |
|---|---|---|---|
| | G 109 | Glasing Gasket | EPDM |
| | G 110 | Gasket For Frame Profile | EPDM |
| | G 201 | Interior Glasing Gasket 4mm | EPDM |
| | G 202 | Interior Glasing Gasket 6mm | EPDM |
| | G 203 | Interior Glasing Gasket 8mm | EPDM |
| | G 301 | Sash Overlap Gasket | EPDM |
| | G 302 | Sash Overlap Gasket | EPDM |
| 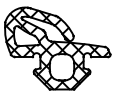 | G 303 | Inner Overlap | EPDM |

| ACCESSORIES | | | |
|---|---|---|---|
| Drawing | Code | Description | Material |
| | G 304 | Channel Cover Gasket | EPDM |
| | G 305 | Interior Gasket | EPDM |
| 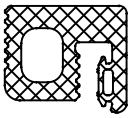 | G 307 | Frame Cover Profile Support Gasket | EPDM |
| | G 314 | Sash Central Gasket | EPDM |
| | B 42 | Brush Gasket | EPDM |

# ACCESSORIES

| Drawing | Code | Description | Material |
|---|---|---|---|
| 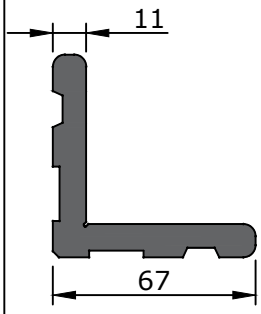 | 306-1 | 42001 & 42002Press Corner Cleat 30.9mm | Aluminium |
| | 306-8 | 42003Press Corner Cleat 37.9mm | |
| 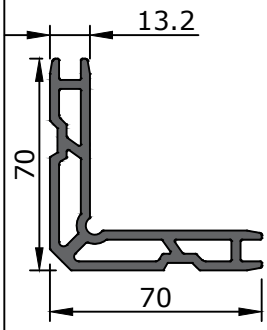 | 308-2 | 42004Press Corner Cleat 37.9mm | |
| | 308-5 | 42012 & 42004 & 42003 Press Corner Cleat 36.3mm | |
| | 308-6 | 42004 & 42008Press Corner Cleat 29.6mm | |
| | 308-10 | 42001Press Corner Cleat | |
| 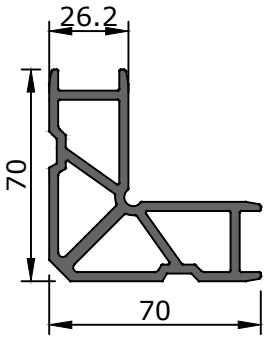 | 311-3 | 42012Press Corner Cleat 18.8mm | |
| 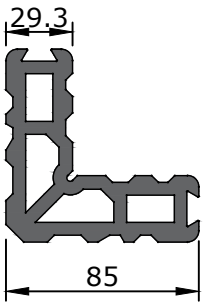 | 316-2 | 42008Press Corner Cleat 4.7mm | |

# ACCESSORIES

| Drawing | Code | Description | Material |
|---|---|---|---|
| 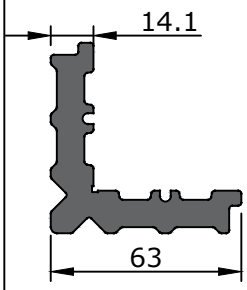 | 317-1 | 42003Press Corner Cleat 57.2mm | Aluminium |
| 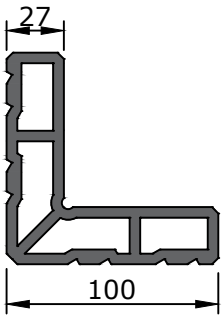 | 318-1 | 42008Press Corner Cleat 3.4mm | |
| 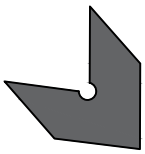 | 21326 | Press Corner Cleat For Mullion Profile 18mm | |
| 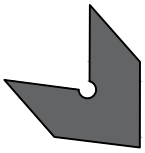 | 21327 | Press Corner Cleat For Sash Profile 13.5mm | |

| Glass Size | | |
|---|---|---|
| A(mm) | B | C |
| 20 | G 201 | 21504 |
| 22 | G 203 | 21503 |
| 24 | G 202 | 21503 |
| 26 | G 203 | 21502 |
| 28 | G 201 | 21502 |
| 30 | G 108 | 21502 |
| 32 | G 203 | 21501 |
| 34 | G 201 | 21501 |

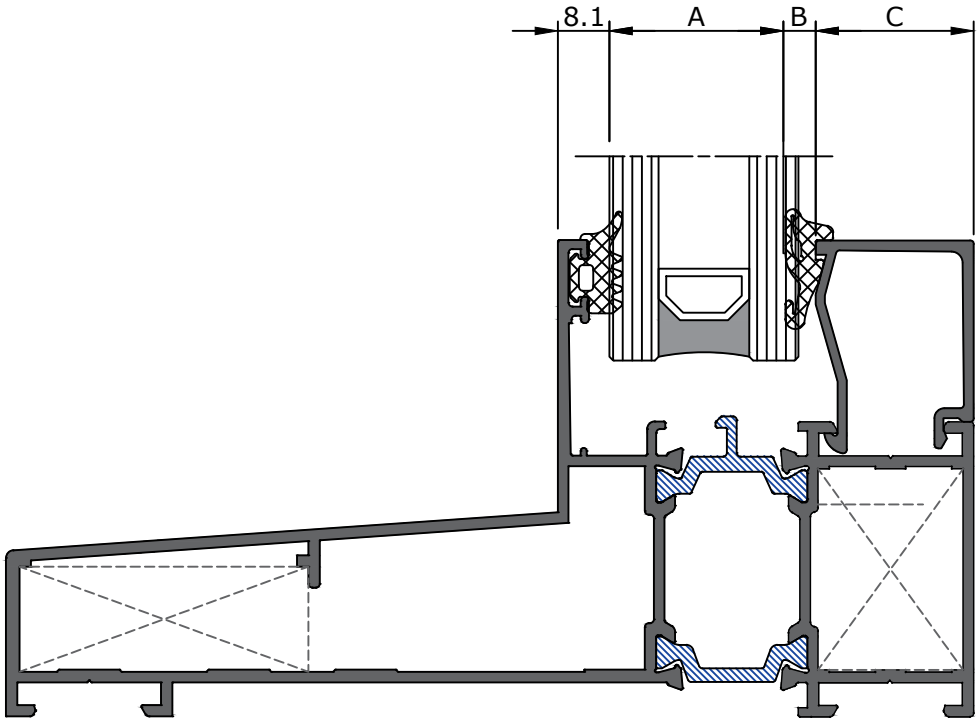

| Glass Size | | |
|---|---|---|
| A(mm) | D | E |
| 20 | G 201 | 21504 |
| 22 | G 203 | 21503 |
| 24 | G 202 | 21503 |
| 26 | G 202 | 21502 |
| 28 | G 201 | 21502 |
| 30 | G 108 | 21502 |
| 32 | G 202 | 21501 |
| 34 | G 201 | 21501 |

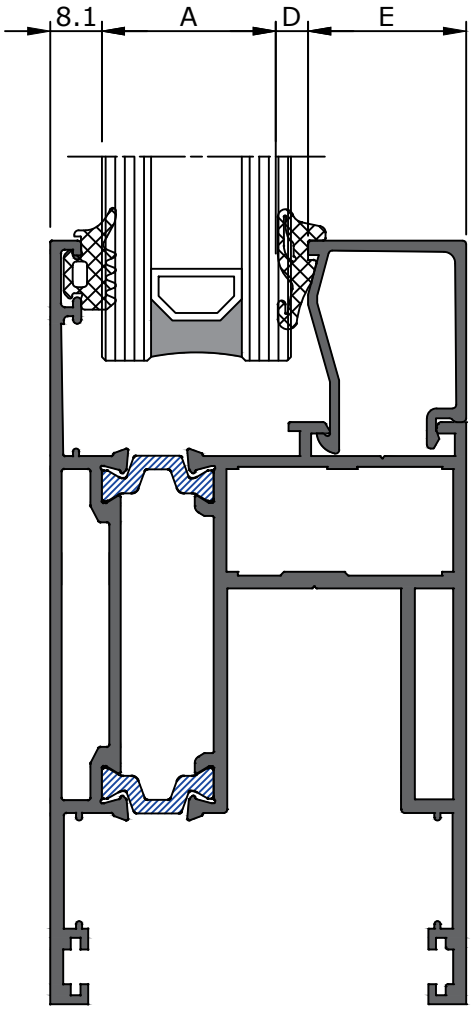

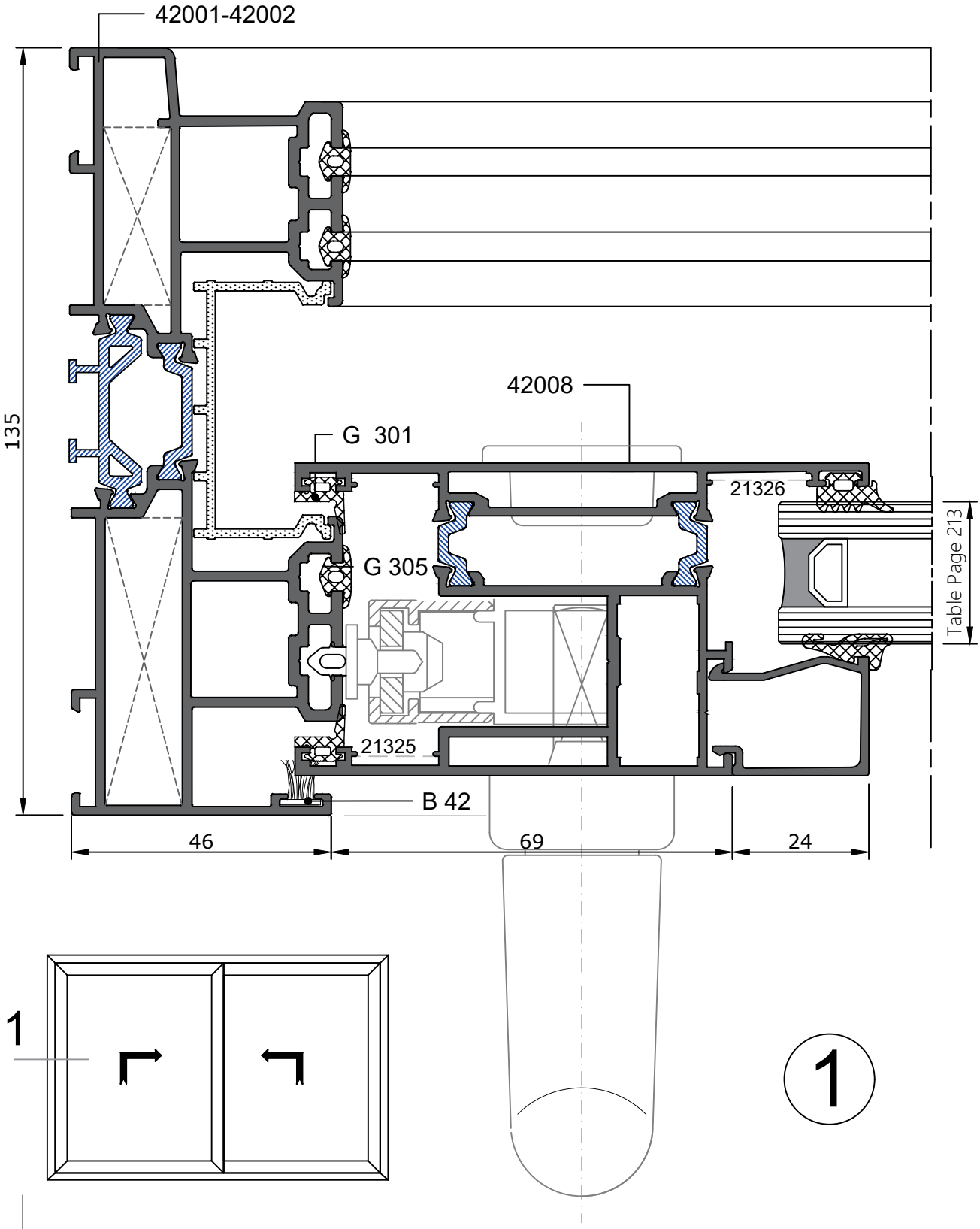
42001-42002
135
42008
G 301
21326
G 305
Table Page 213
21325
B 42
46
69
24
1
1

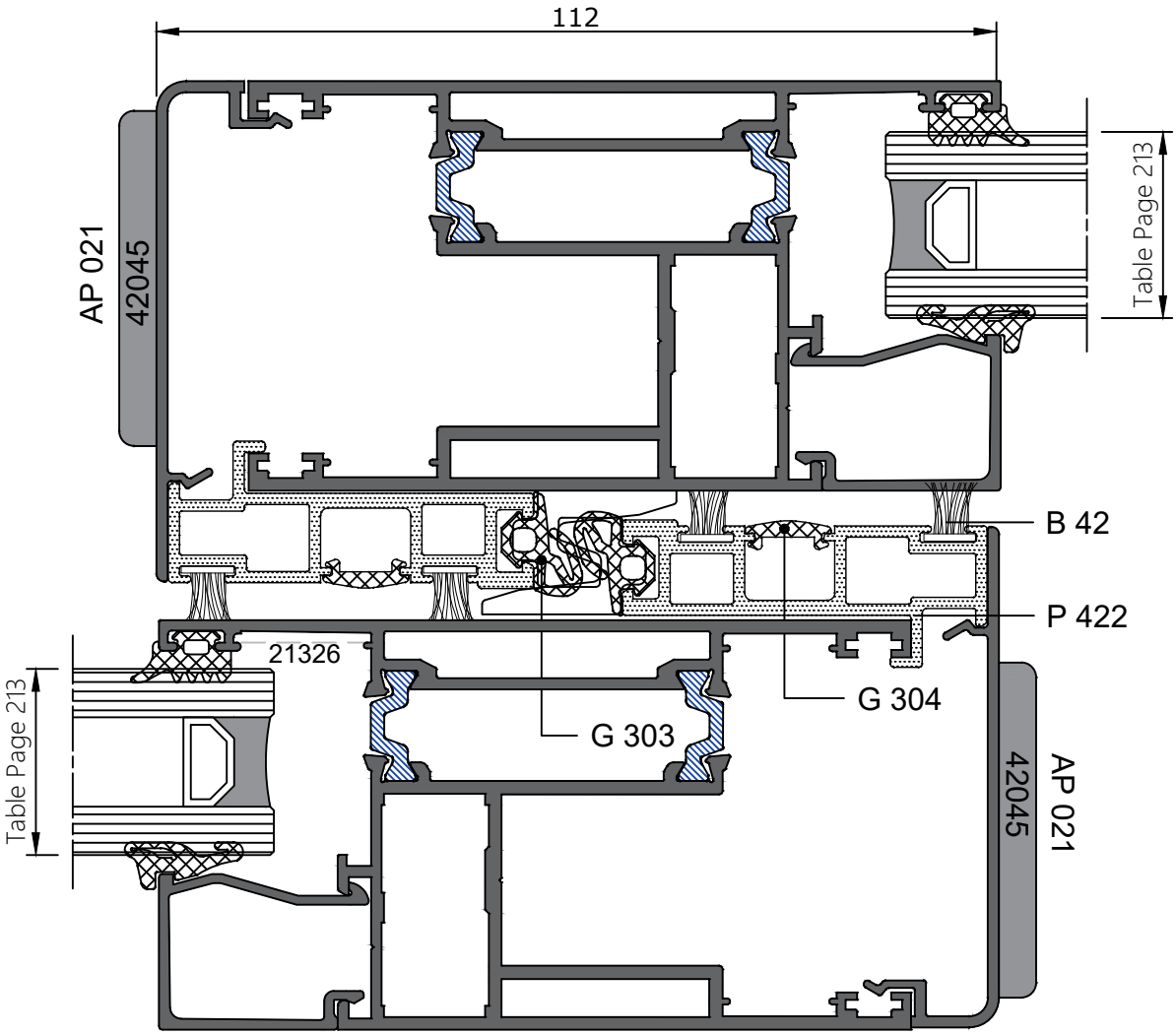
112
AP 021
42045
Table Page 213
B 42
P 422
21326
G 304
G 303
Table Page 213
42045
AP 021

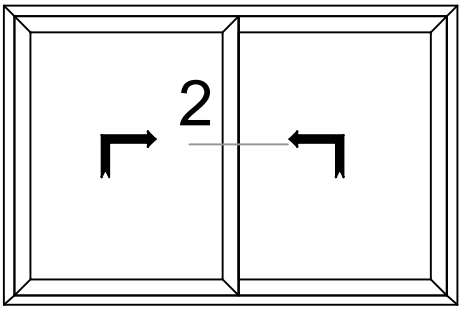
2

2

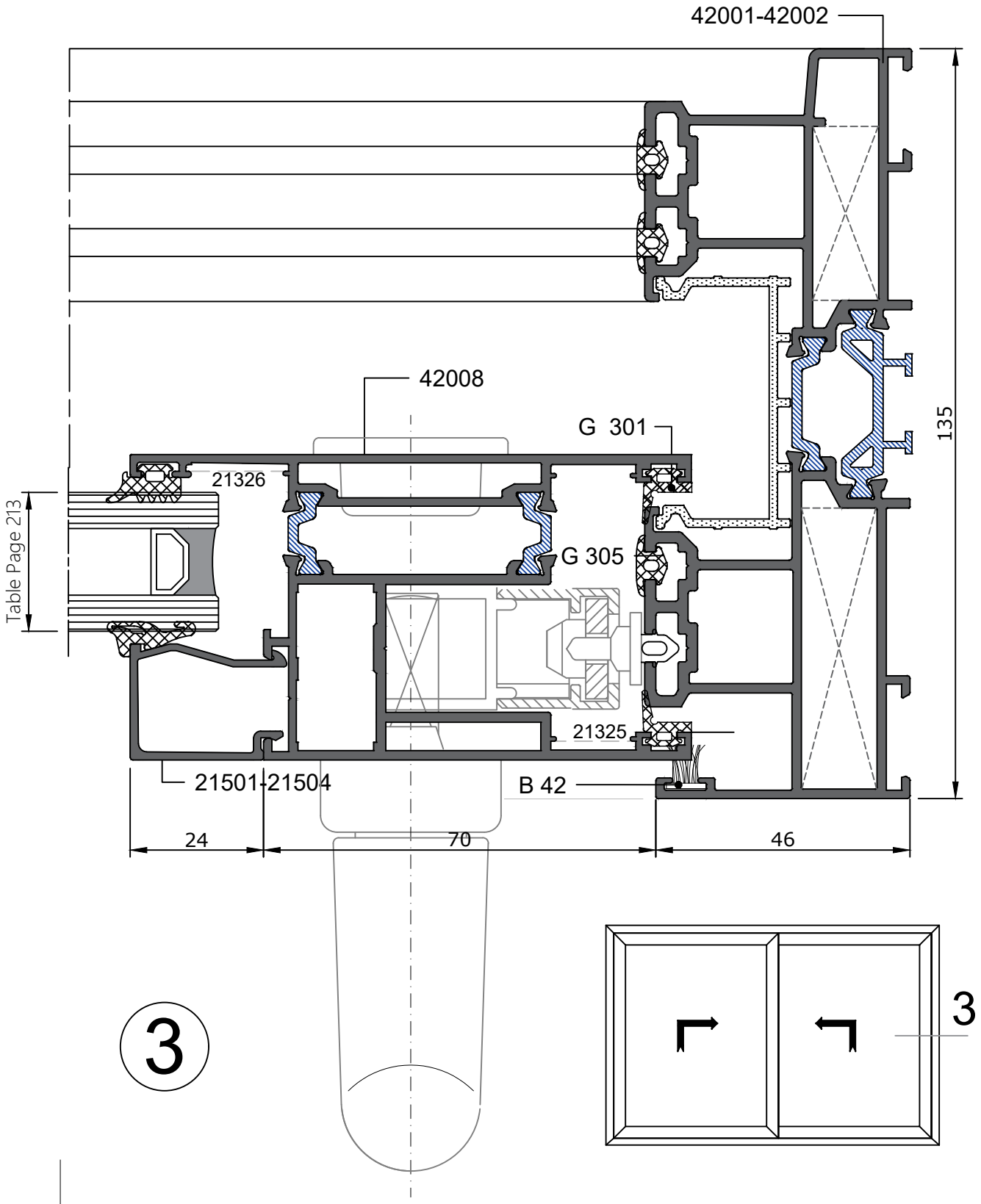
42001-42002
42008
G 301
21326
G 305
21325
21501-21504
B 42
Table Page 213
135
24
70
46
3
3

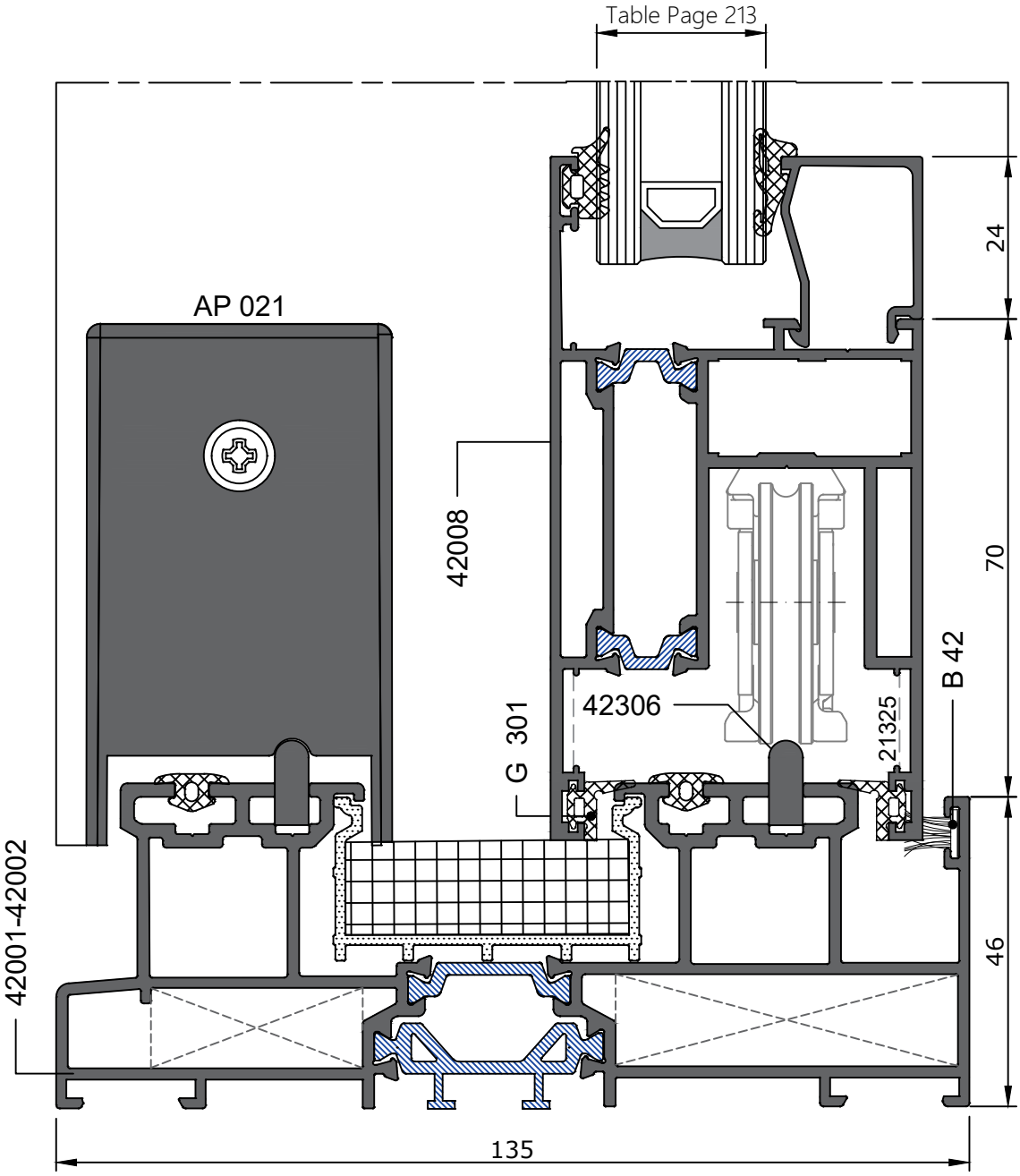
Table Page 213
AP 021
42008
42306
G 301
21325
B 42
24
70
46
42001-42002
135

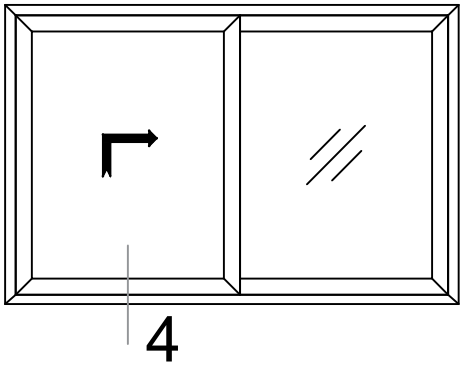
4

4

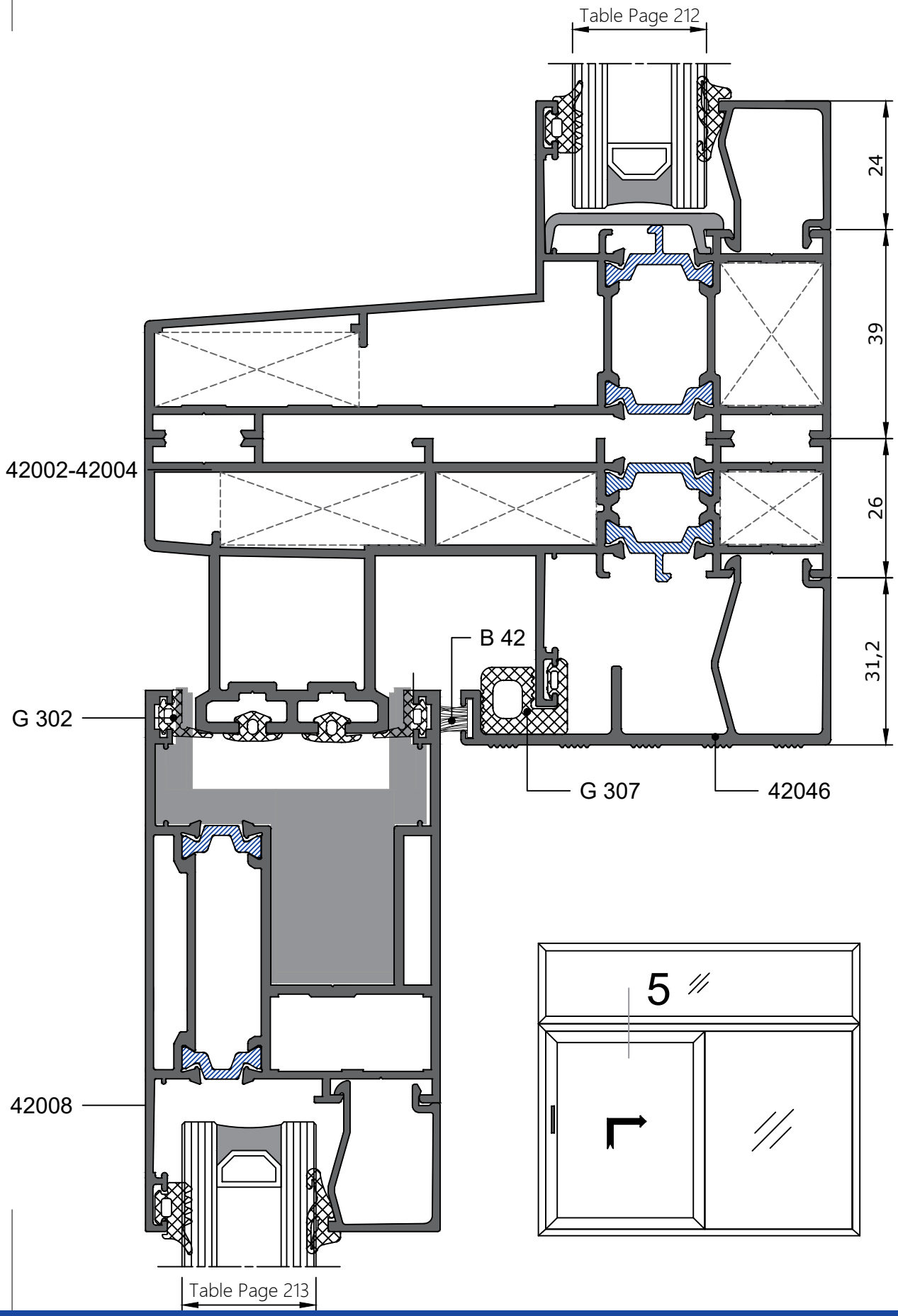
Table Page 212
24
39
26
31,2
42002-42004
B 42
G 302
G 307
42046
42008
5
Table Page 213

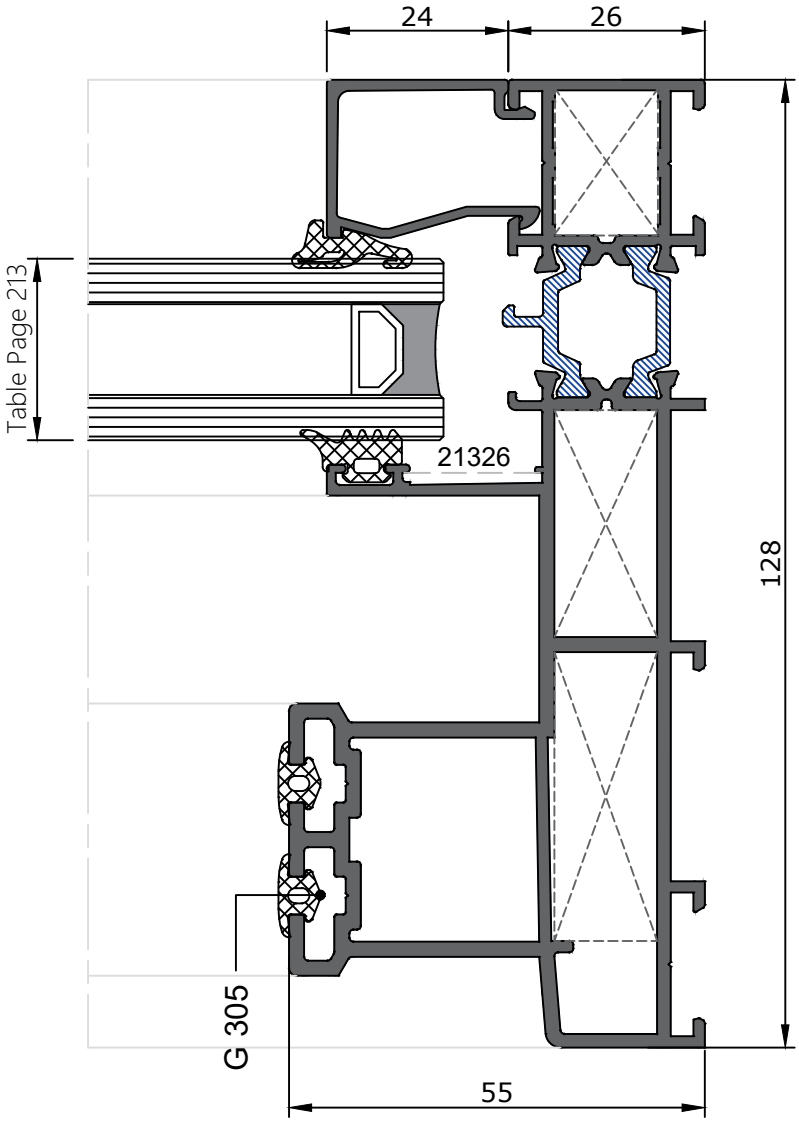


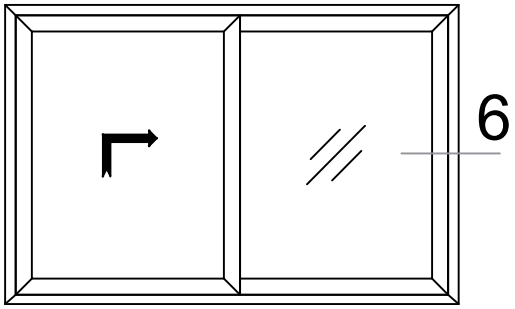


6

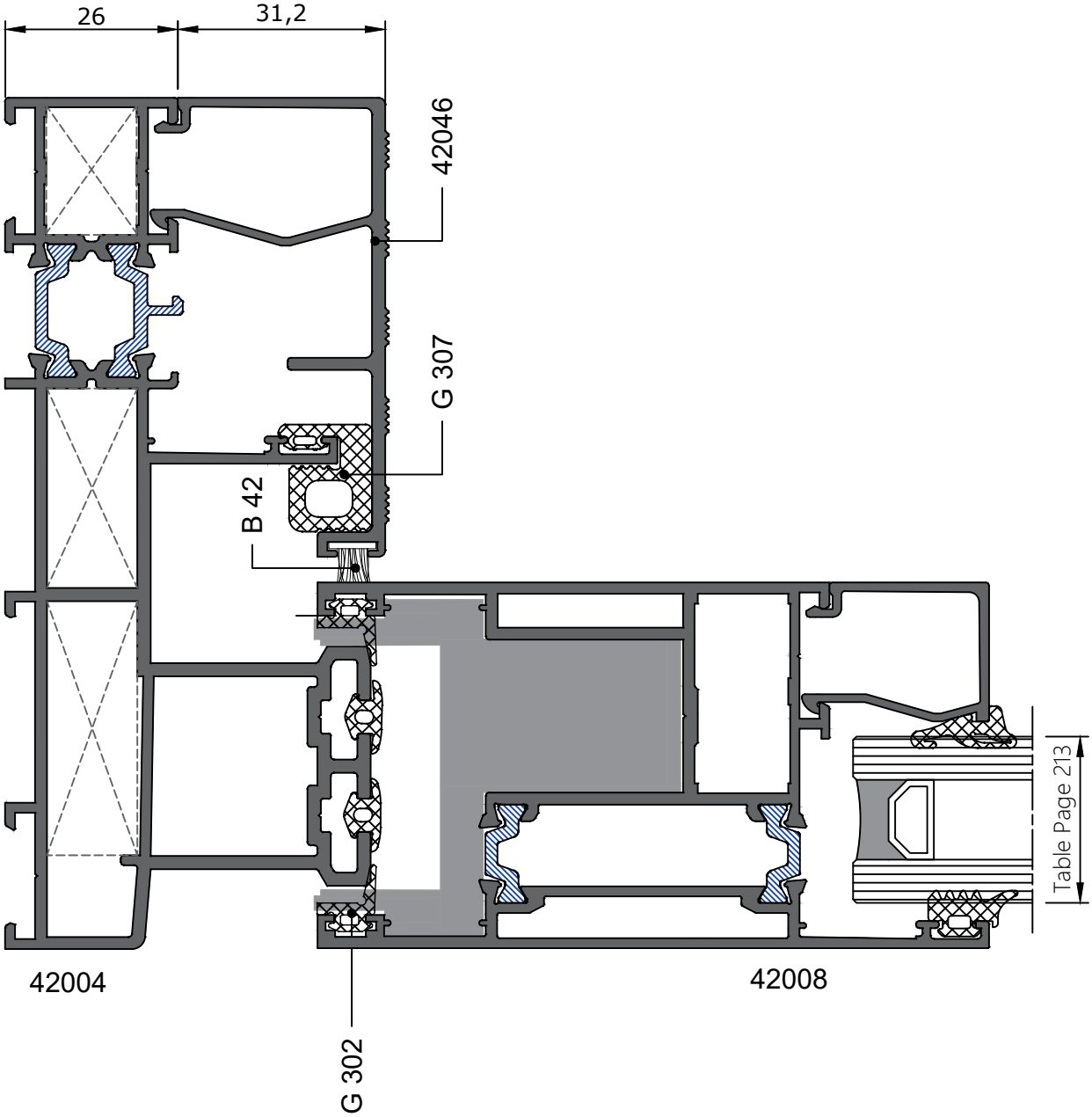


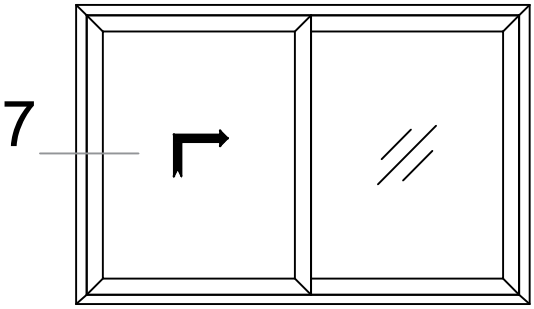


7

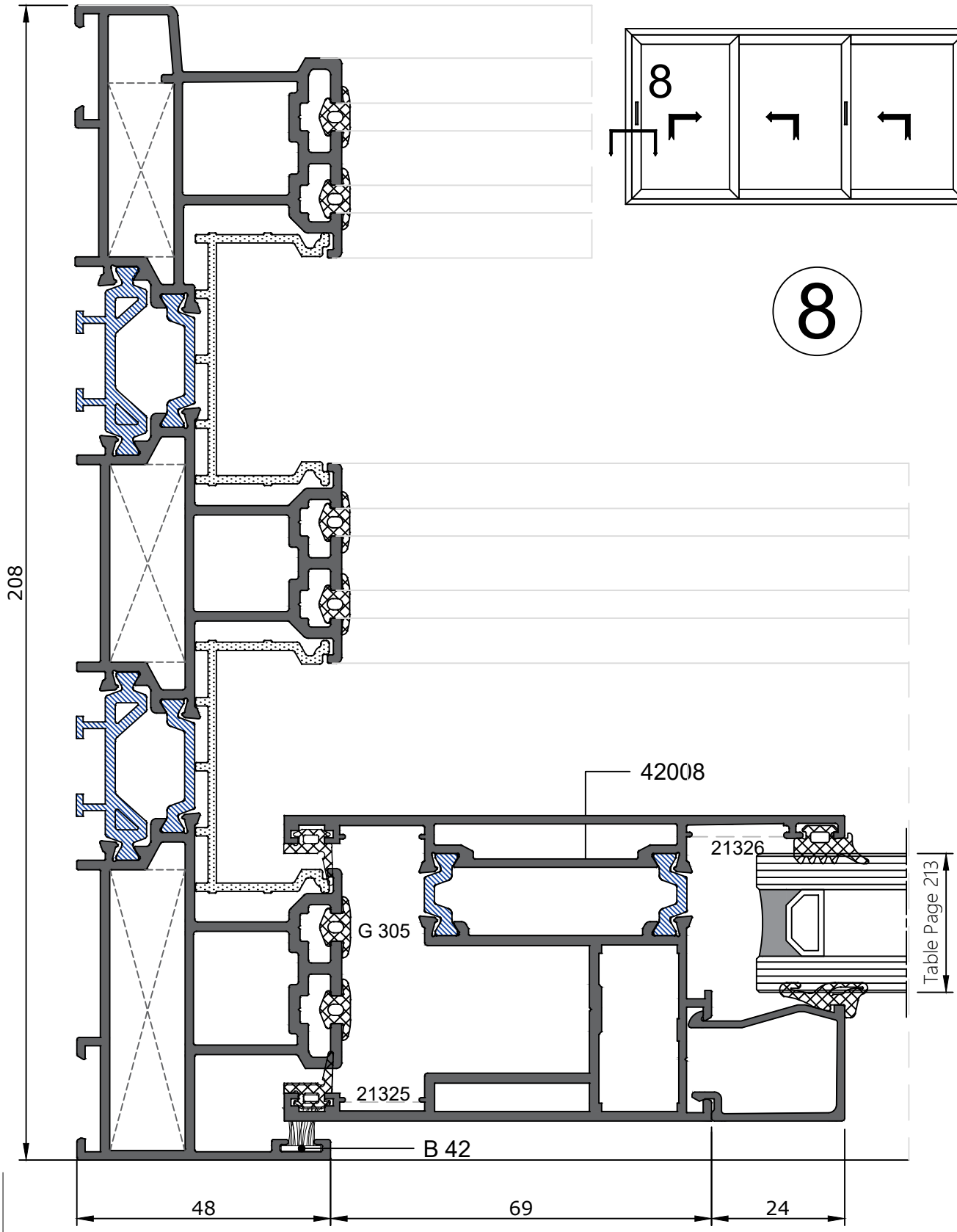
8
8
208
42008
21326
G 305
21325
B 42
Table Page 213
48
69
24

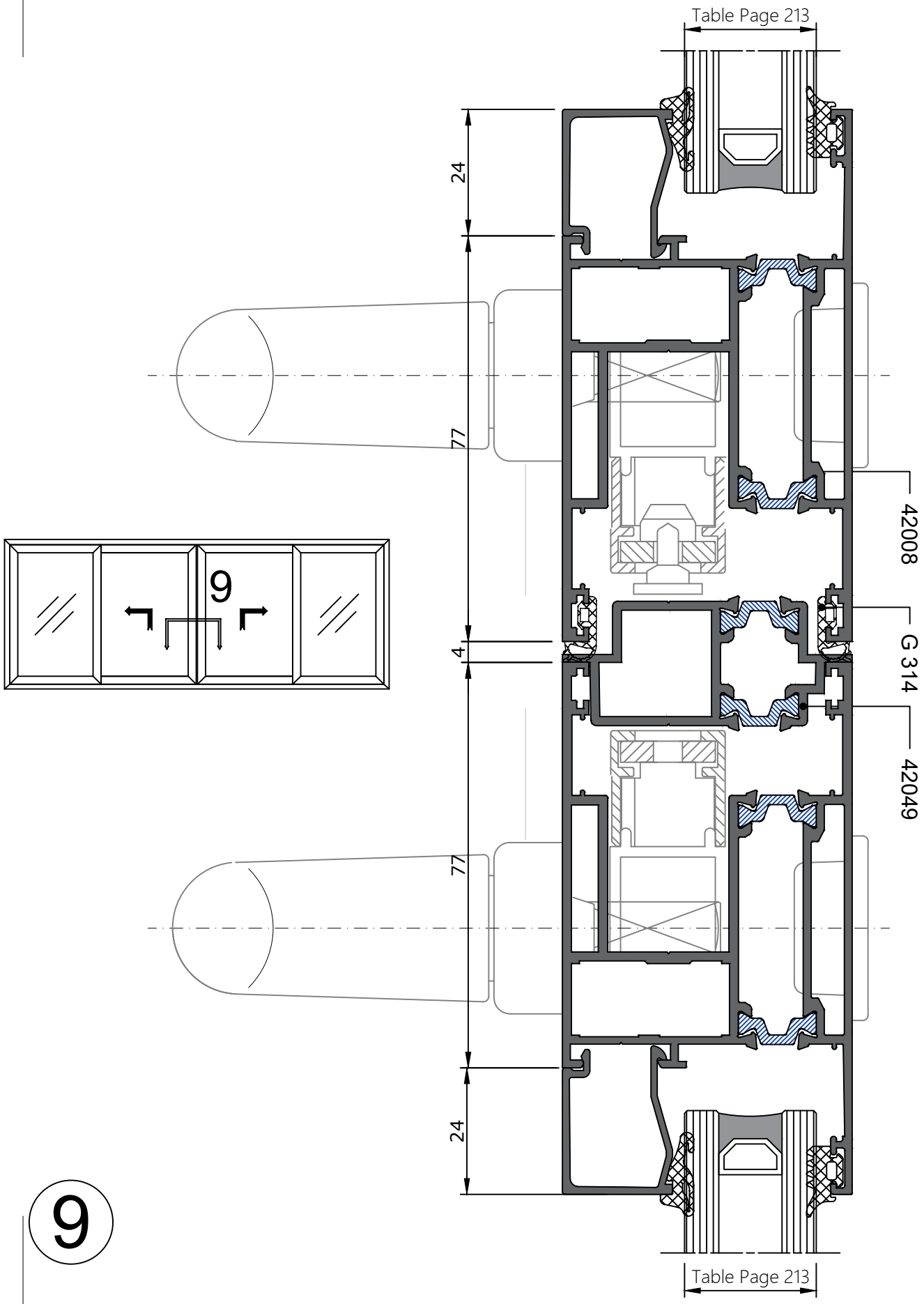


9

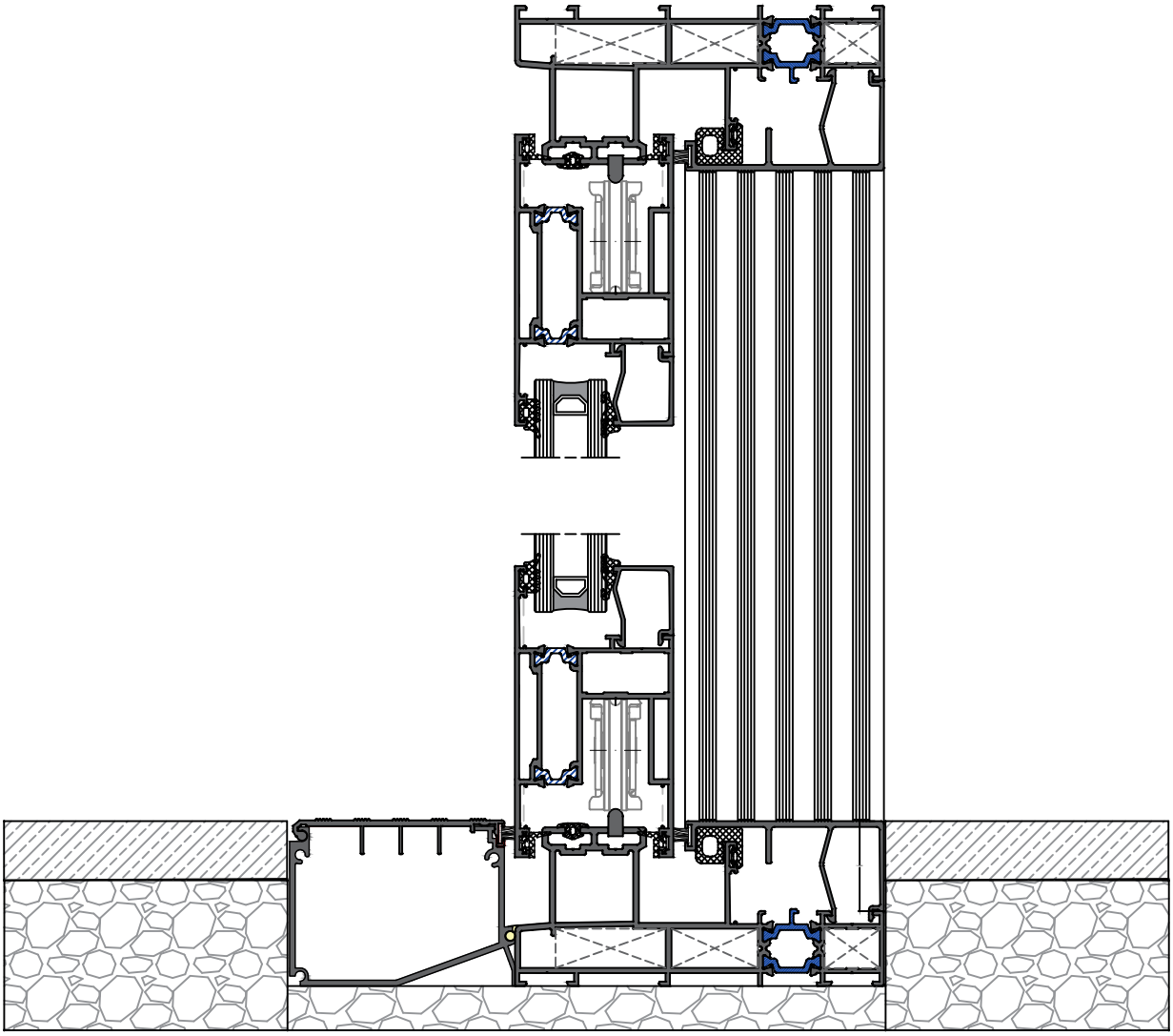

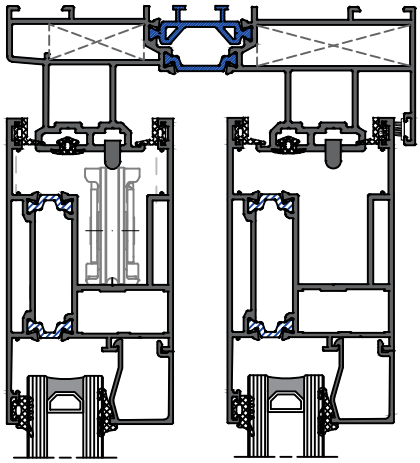

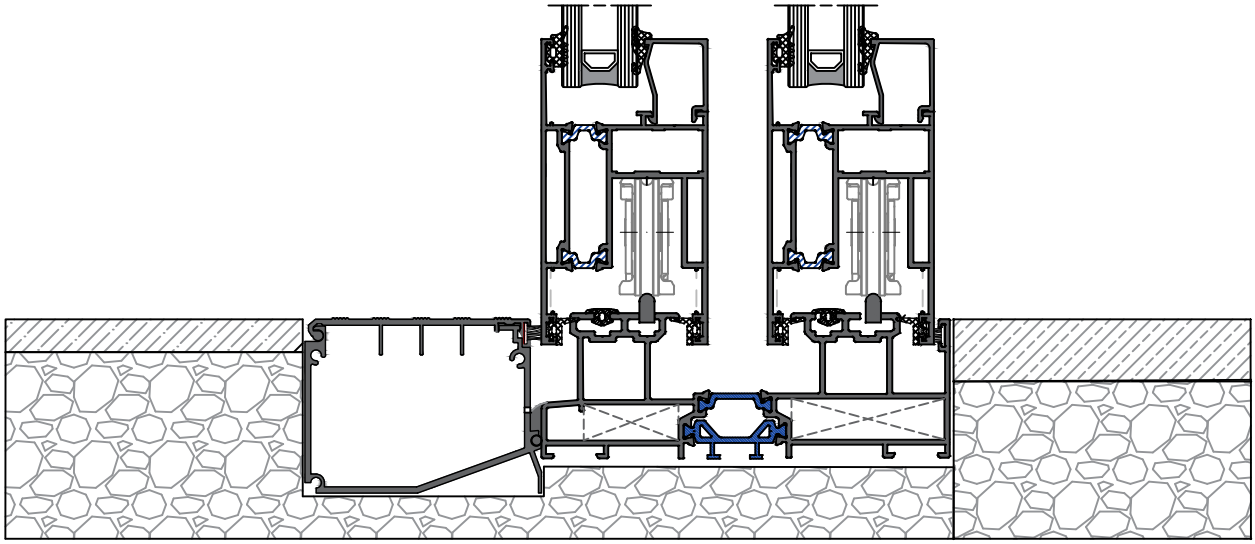

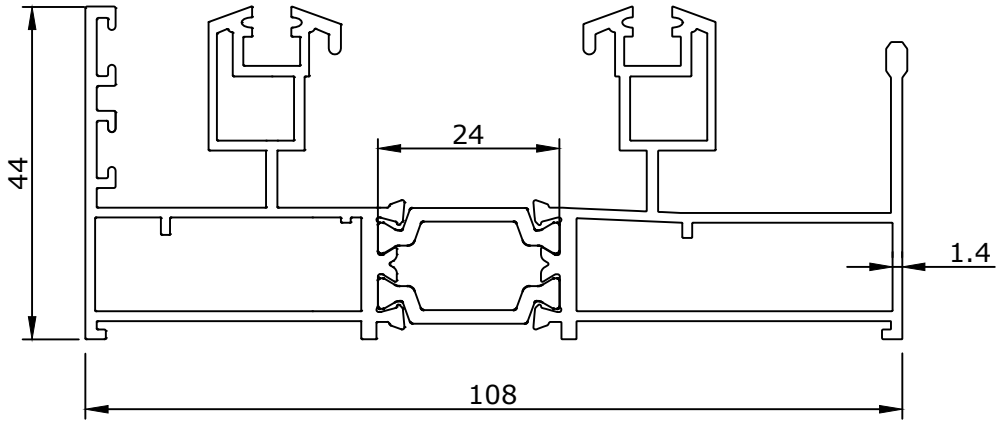


| Profile Name | Profile Code | Weight (Kg/m) |
|---|---|---|
| Frame Profile | 13783-13784 | 1.900 |

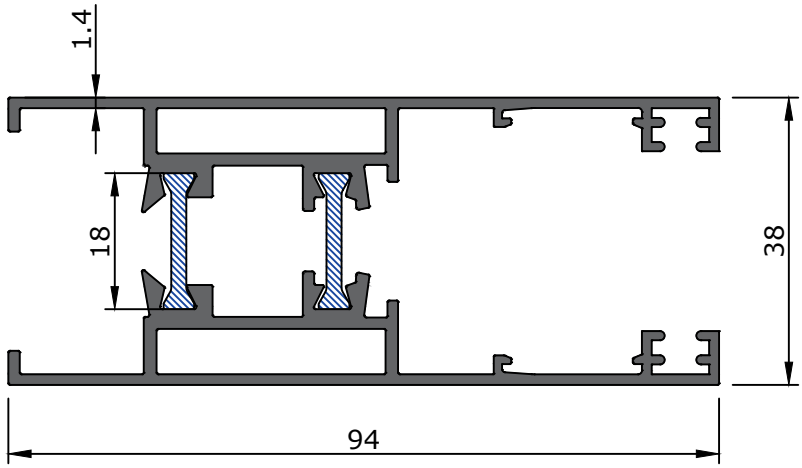


| Profile Name | Profile Code | Weight (Kg/m) |
|---|---|---|
| Frame Profile | 13781-13781 | 1.610 |

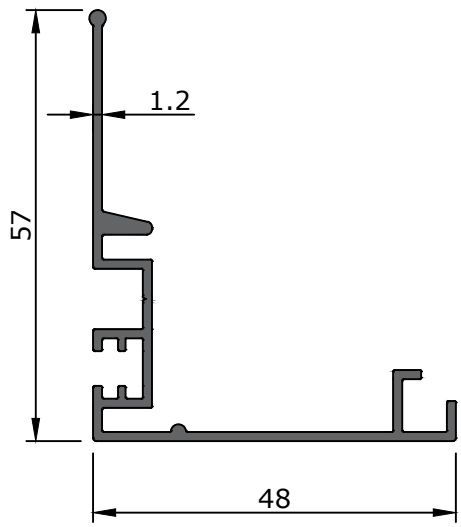


| Profile Name | Profile Code | Weight (Kg/m) |
|---|---|---|
| Cover Profile | 13782 | 0.517 |

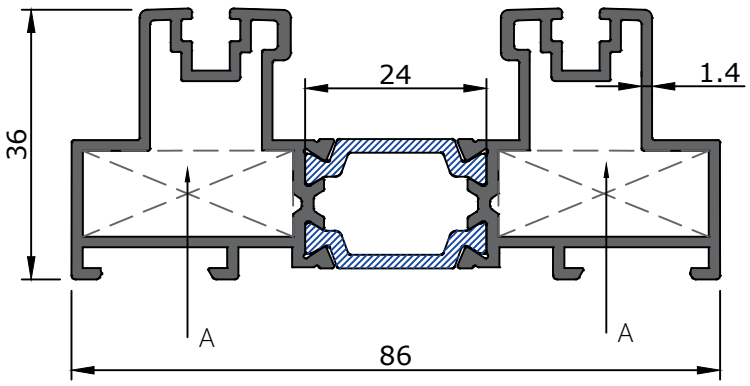


| Profile Name | Profile Code | Weight (Kg/m) |
|---|---|---|
| Frame Profile | 33001 | 1.515 |

| Corner Cleat | A |
|---|---|
| 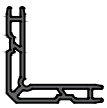 | 306-3<br>27.4mm |

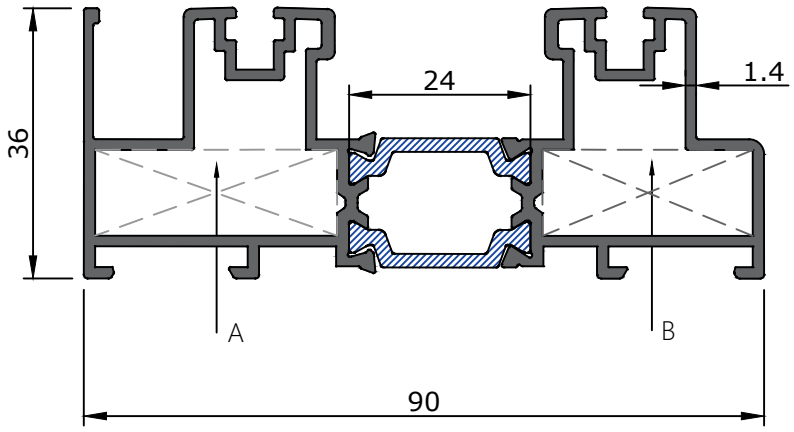


| Profile Name | Profile Code | Weight (Kg/m) |
|---|---|---|
| Frame Profile | 33002 | 1.608 |

| Corner Cleat | A | B |
|---|---|---|
| 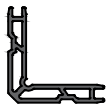 | 306-1<br>30.9mm | 306-3<br>27.4mm |

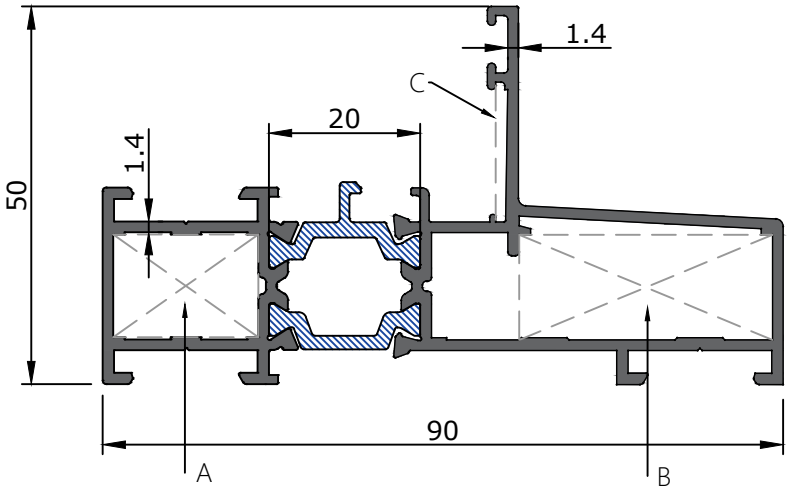


| Profile Name | Profile Code | Weight (Kg/m) |
|---|---|---|
| Frame Profile | 32008 | 1.445 |

| Corner Cleat | A | B | C |
|---|---|---|---|
| 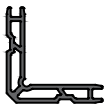 | 308-2<br>18.8mm | 308-16<br>33.1mm | 21326 |

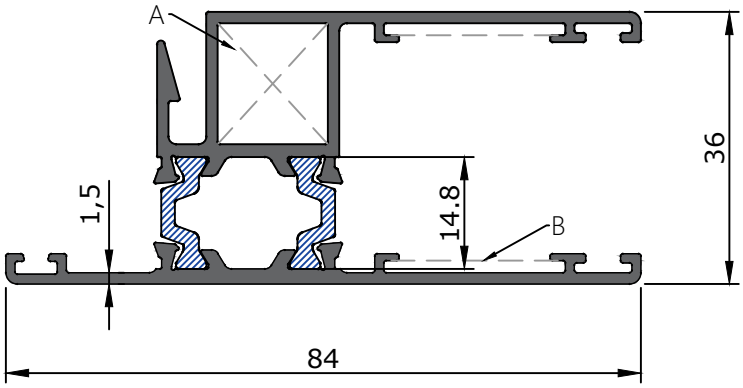


| Profile Name | Profile Code | Weight (Kg/m) |
|---|---|---|
| Frame Profile | 32005 | 1.256 |

| Corner Cleat | A | B |
|---|---|---|
| 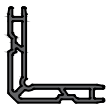 | 317-3<br>15.6mm | AP032 |

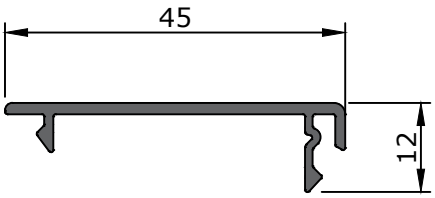


| Profile Name | Profile Code | Weight (Kg/m) |
|---|---|---|
| Cover Profile | 32045 | 0.645 |

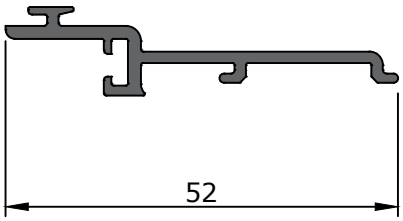


| Profile Name | Profile Code | Weight (Kg/m) |
|---|---|---|
| Locking Profile | 32049 | 0.318 |

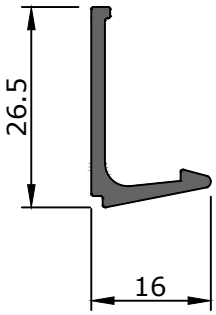


| Profile Name | Profile Code | Weight (Kg/m) |
|---|---|---|
| Glazing Bead | 3250 | 0.190 |

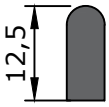


| Profile Name | Profile Code | Weight (Kg/m) |
|---|---|---|
| Rail Profile | 42306 | 0.170 |

# ACCESSORIES

| Drawing | Code | Description | Material |
|---|---|---|---|
| | G 109 | Glasing Gasket | EPDM |
| | G 110 | Gasket For Frame Profile | EPDM |
| | G 108 | Interior Glasing Gasket 2mm | EPDM |
| | G 201 | Interior Glasing Gasket 4mm | EPDM |
| | G 202 | Interior Glasing Gasket 6mm | EPDM |
| 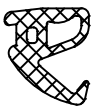 | G 203 | Interior Glasing Gasket 8mm | EPDM |
| | G 308 | Inner Overlap | EPDM |
| | G 309 | Glasing Gasket | EPDM |

| ACCESSORIES | | | |
|---|---|---|---|
| Drawing | Code | Description | Material |
| | B 32 | Brush Gasket | EPDM |
| 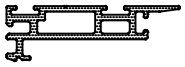 | P 322 | PVC Labyrint Profile | PVC |
| 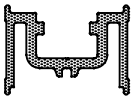 | P 323 | PVC Cremone Channel | PVC |
| | AP 030 | Sash Closing Plug | PVC |
| 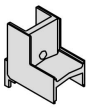 | AP 032 | Corner Cleat For Sash | PVC |
| 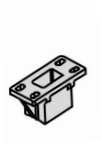 | AP 050 | Sash Stopper Support | PVC |

# ACCESSORIES

| Drawing | Code | Description | Material |
|---|---|---|---|
| 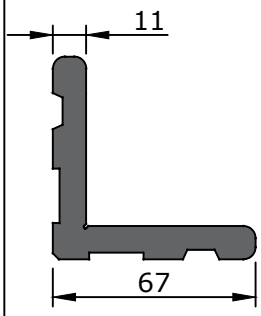 | 306-1 | 33002Press Corner Cleat 30.9mm | Aluminium |
| | 306-3 | 33002 & 33001Press Corner Cleat 27.4mm | |
| 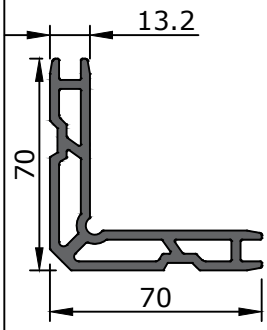 | 308-2 | 32008Press Corner Cleat 37.9mm | |
| | 308-16 | 32008Press Corner Cleat 33.1mm | |
| 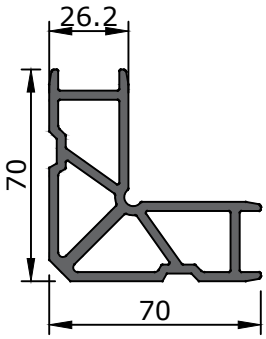 | 317-3 | 32005Press Corner Cleat 15.6mm | |
| 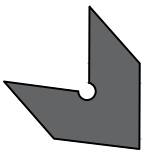 | 21326 | 32008Press Corner Cleat 18mm | |

| Glass Size | | |
|---|---|---|
| A(mm) | B | C |
| 20 | G 201 | 21504 |
| 22 | G 203 | 21503 |
| 24 | G 202 | 21503 |
| 26 | G 202 | 21502 |
| 28 | G 201 | 21502 |
| 30 | G 108 | 21502 |
| 32 | G 202 | 21501 |
| 34 | G 201 | 21501 |

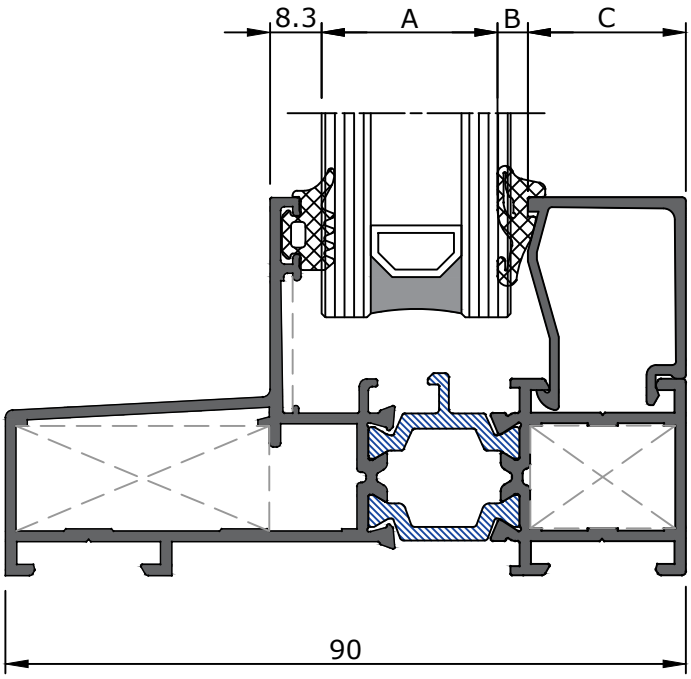

| Glass Size | |
|---|---|
| A(mm) | D |
| 20 | G 203 |
| 22 | G 202 |
| 24 | G 108 |

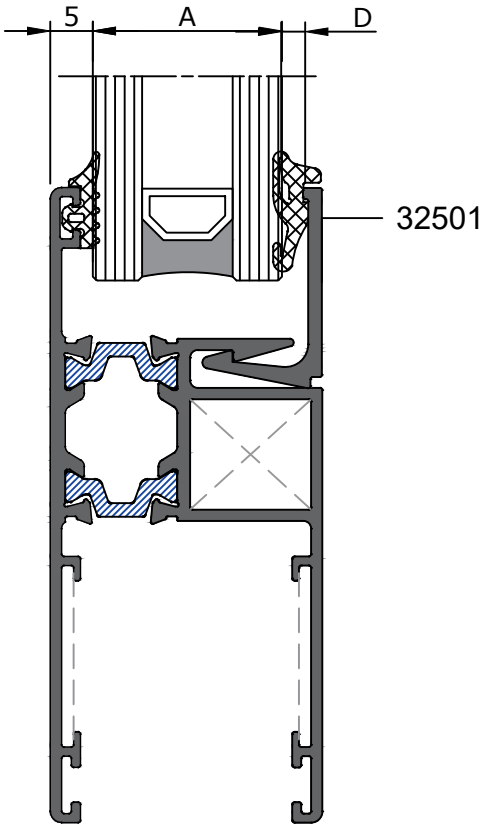

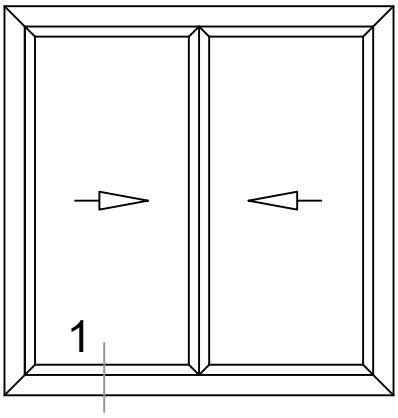
1

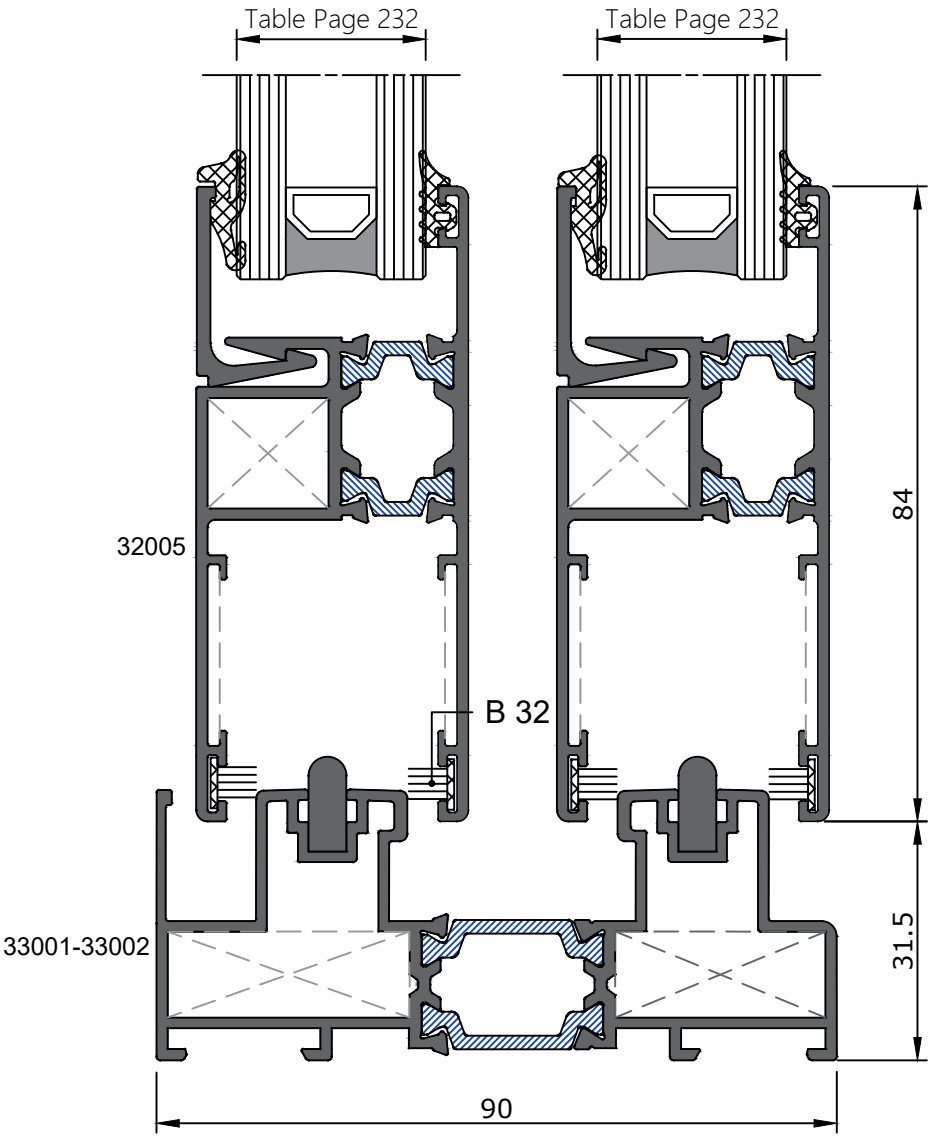
Table Page 232
Table Page 232
32005
B 32
33001-33002
84
31.5
90

1

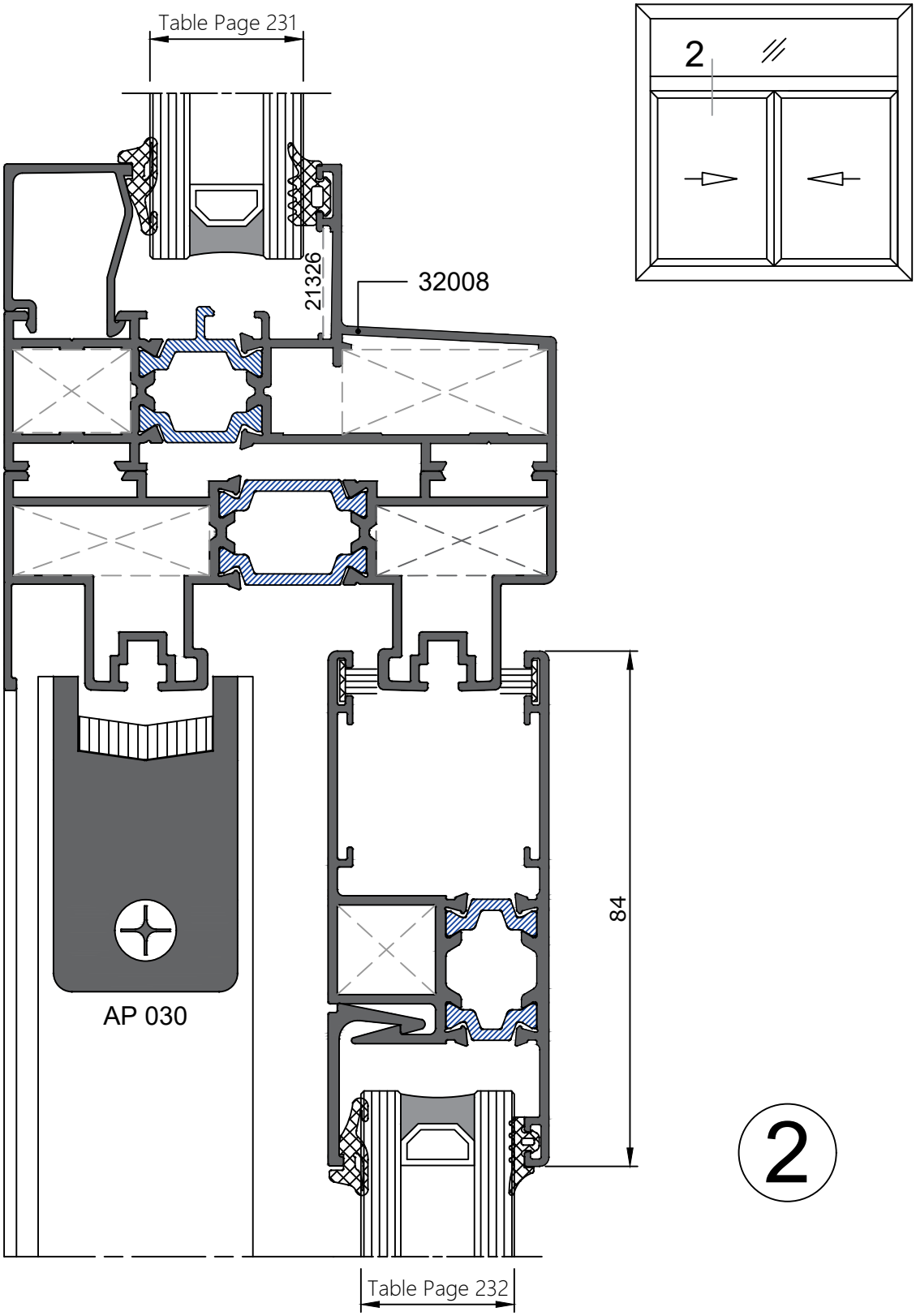
Table Page 231
2
21326
32008
84
AP 030
2
Table Page 232

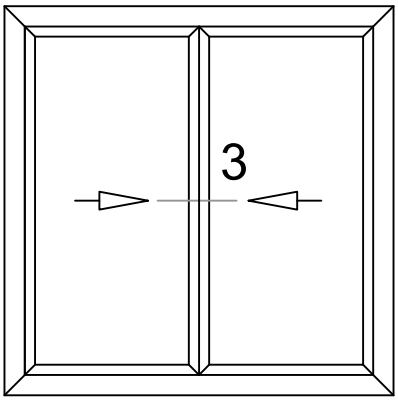
3

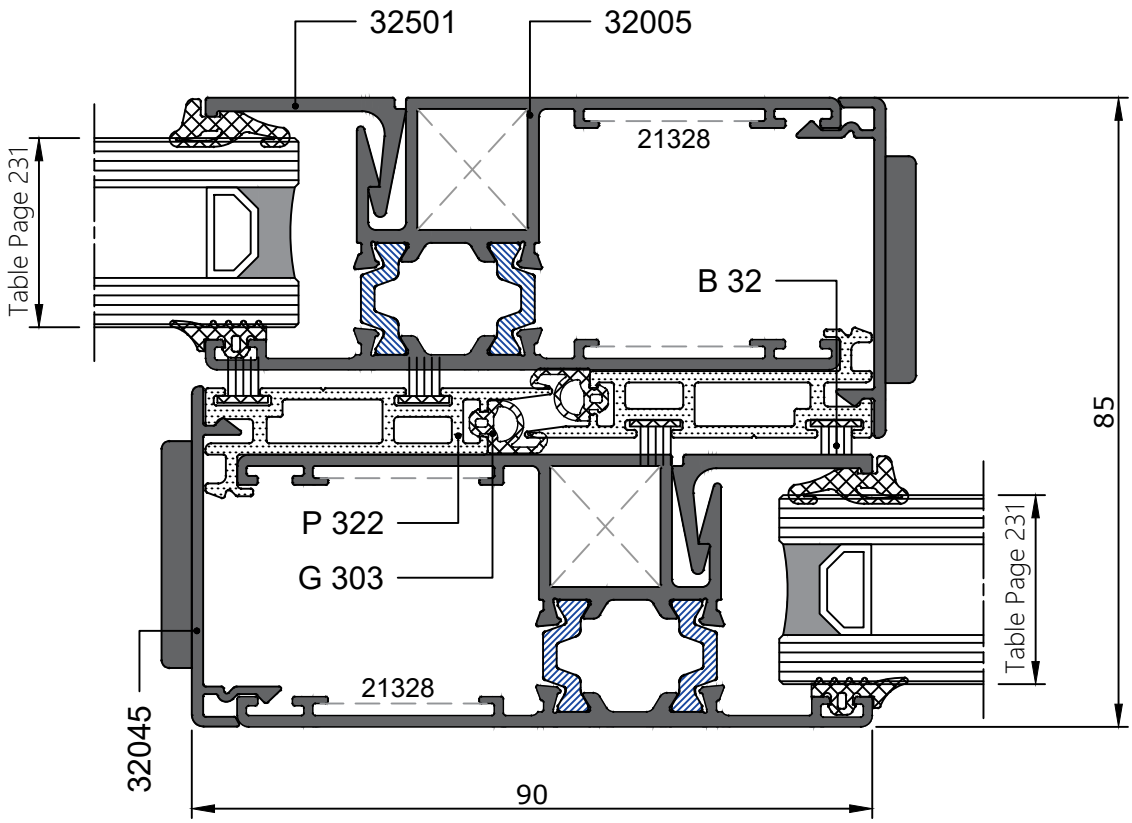
32501
32005
21328
Table Page 231
B 32
85
P 322
G 303
Table Page 231
21328
32045
90

3

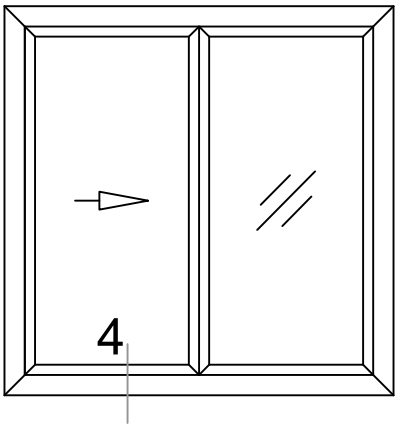
4

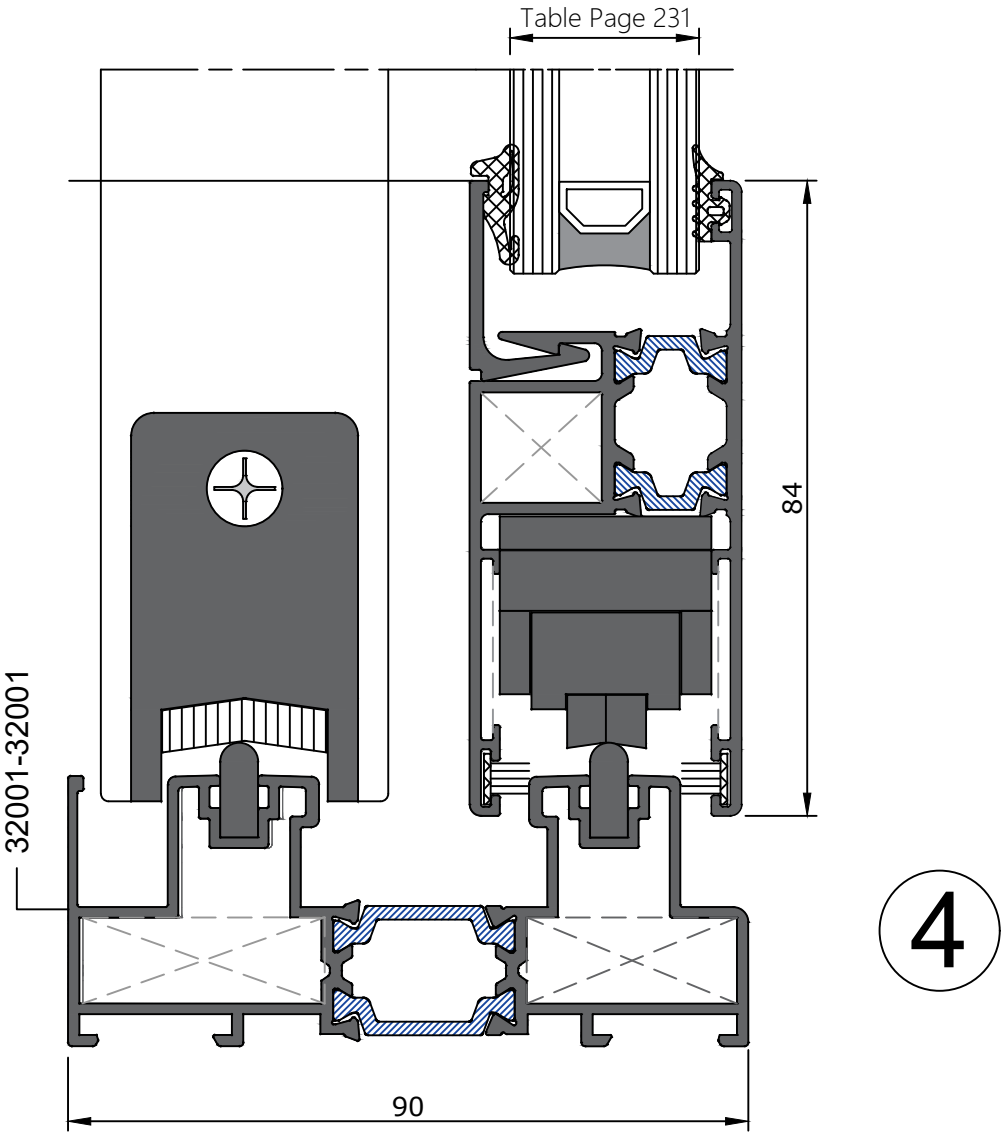
Table Page 231
84
32001-32001
90
4

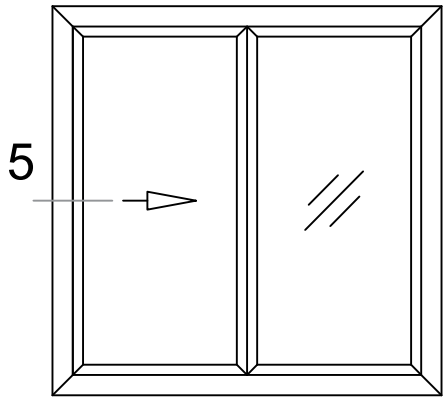


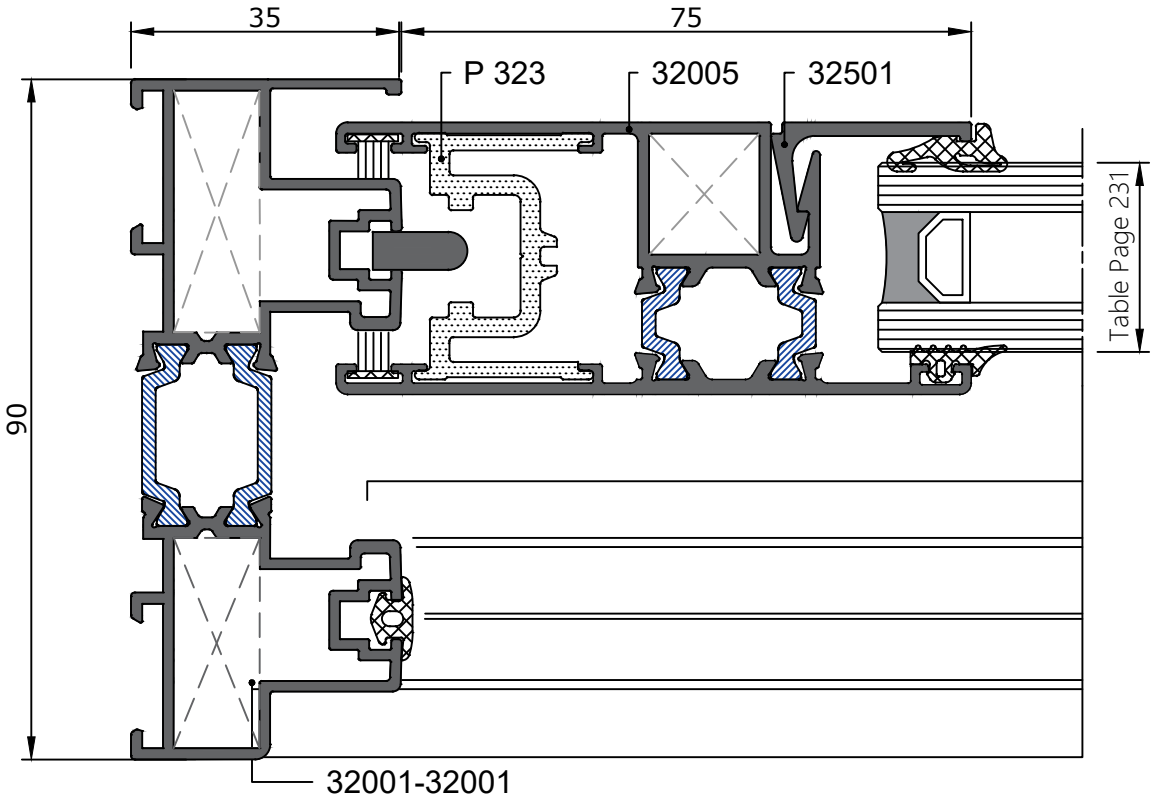


5

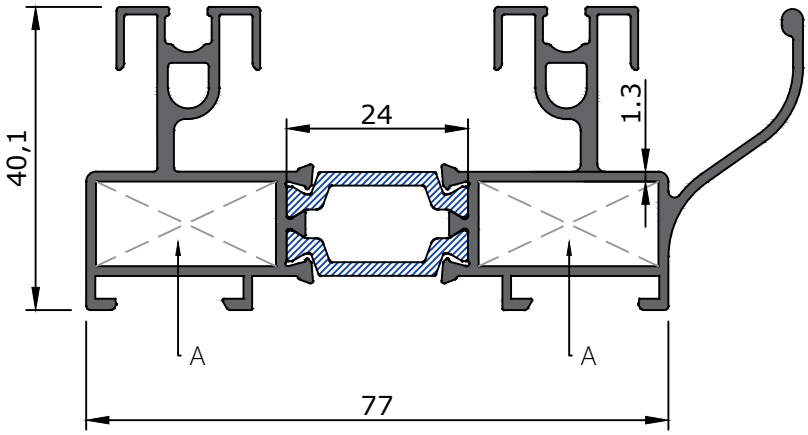


| Profile Name | Profile Code | Weight (Kg/m) |
|---|---|---|
| Frame Profile | 3022-3021 | 1.582 |

| Corner Cleat | A |
|---|---|
| 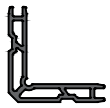 | 810-4<br>23.4mm |

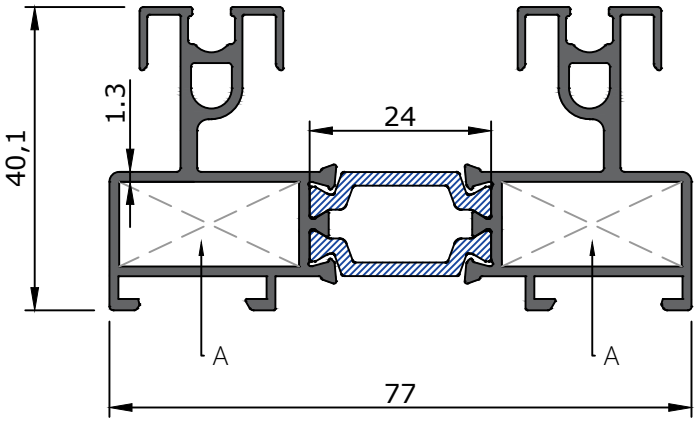


| Profile Name | Profile Code | Weight (Kg/m) |
|---|---|---|
| Frame Profile | 3021-3021 | 1.441 |

| Corner Cleat | A |
|---|---|
| 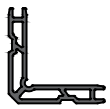 | 810-4<br>23.4mm |

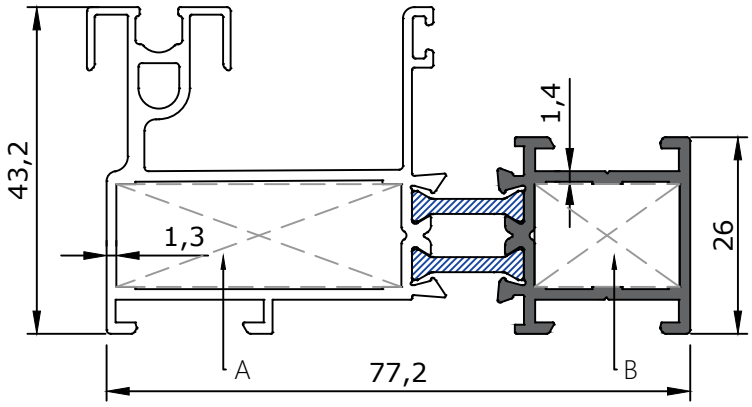


| Profile Name | Profile Code | Weight (Kg/m) |
|---|---|---|
| Frame Profile | 3023-3024 | 1.457 |

| Corner Cleat | A | B |
|---|---|---|
| 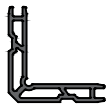 | 308-13<br>18.8mm | 308-22<br>37.3mm |

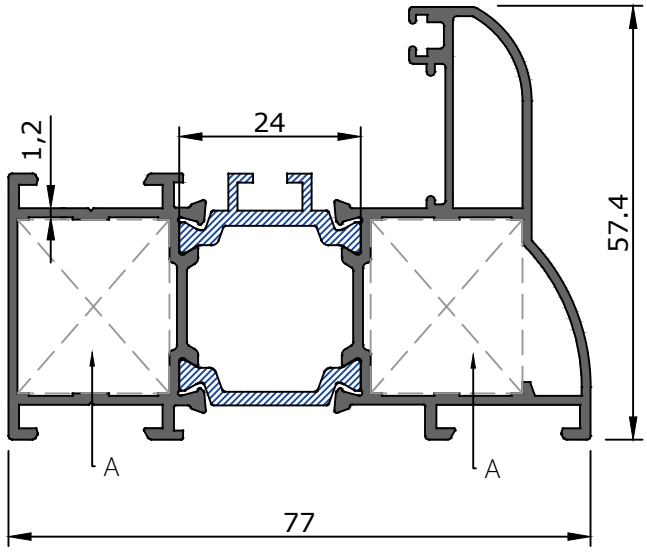


| Profile Name | Profile Code | Weight (Kg/m) |
|---|---|---|
| Frame Profile | 2021-2022 | 1.396 |

| Corner Cleat | A |
|---|---|
| 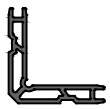 | 722-1<br>19.6mm |

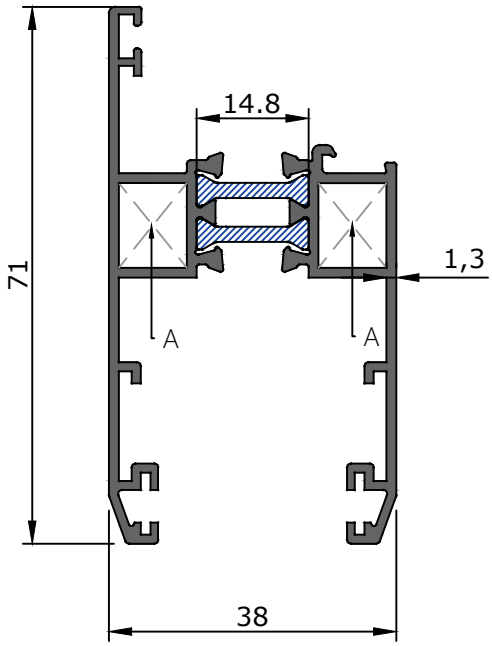


| Profile Name | Profile Code | Weight (Kg/m) |
|---|---|---|
| Sash Profile | 3031-3032 | 1.126 |

| Corner Cleat | A |
|---|---|
| 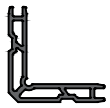 | 810-6<br>8.6mm |

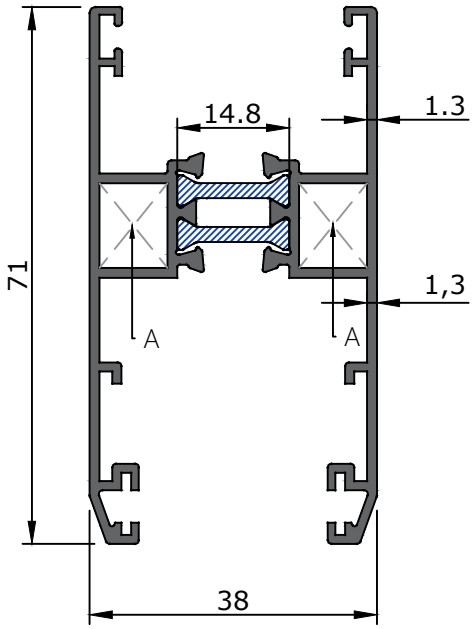


| Profile Name | Profile Code | Weight (Kg/m) |
|---|---|---|
| Sash Profile | 3031-3031 | 1.127 |

| Corner Cleat | A |
|---|---|
| 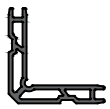 | 810-6<br>8.6mm |

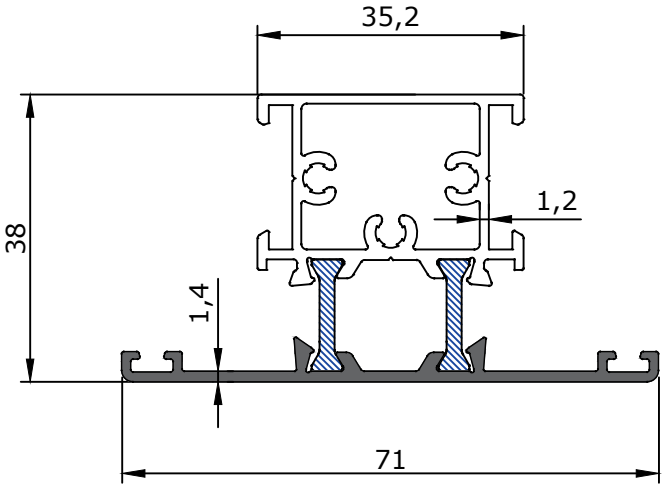


| Profile Name | Profile Code | Weight (Kg/m) |
|---|---|---|
| Mullion Profile | 3047-3048 | 1.100 |

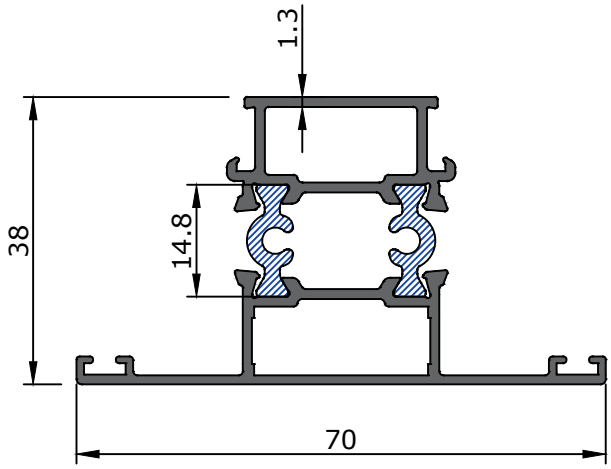


| Profile Name | Profile Code | Weight (Kg/m) |
|---|---|---|
| Mullion Profile | 3045-3046 | 0.955 |

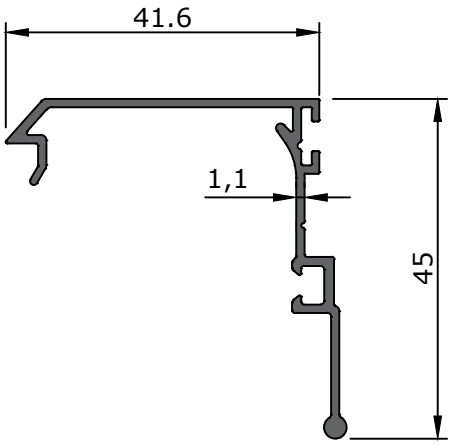


| Profile Name | Profile Code | Weight (Kg/m) |
|---|---|---|
| Inter Lock Profile | 3056 | 0.300 |

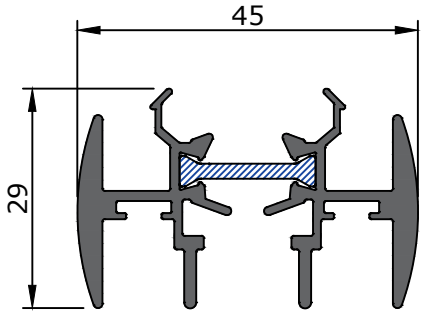


| Profile Name | Profile Code | Weight (Kg/m) |
|---|---|---|
| Sash Adjoining Profile | 3060-3060 | 0.910 |

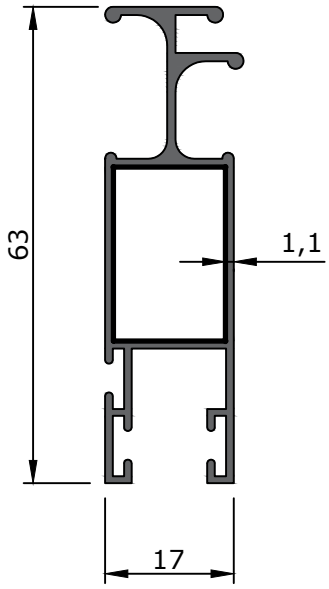


| Profile Name | Profile Code | Weight (Kg/m) |
|---|---|---|
| Grid Vent | 12955 | 0.560 |

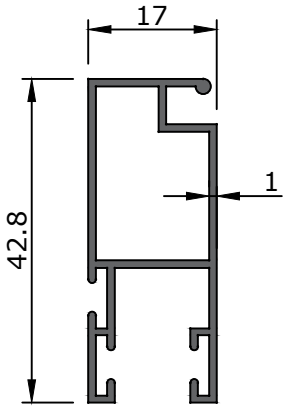


| Profile Name | Profile Code | Weight (Kg/m) |
|---|---|---|
| Grid Vent | 11871 | 0.390 |

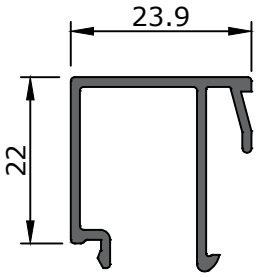


| Profile Name | Profile Code | Weight (Kg/m) |
|---|---|---|
| Glazing Bead | 2055 | 0.295 |

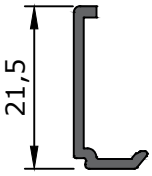


| Profile Name | Profile Code | Weight (Kg/m) |
|---|---|---|
| Glazing Bead | 3055 | 0.113 |

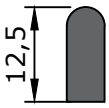


| Profile Name | Profile Code | Weight (Kg/m) |
|---|---|---|
| Rail Profile | 42306 | 0.170 |

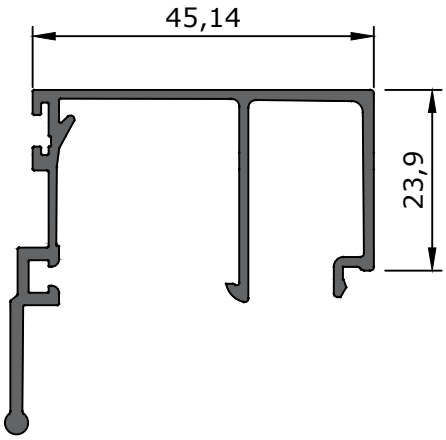


| Profile Name | Profile Code | Weight (Kg/m) |
|---|---|---|
| Glazing Bead | 3058 | 0.614 |

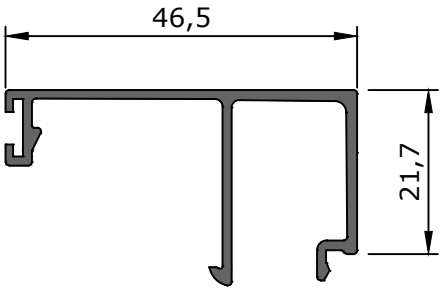


| Profile Name | Profile Code | Weight (Kg/m) |
|---|---|---|
| Glazing Bead | 3059 | 0.295 |

# ACCESSORIES

| Drawing | Code | Description | Material |
|---|---|---|---|
| | G 309 | Glasing Gasket | EPDM |
| | B 42 | Brush Gasket | EPDM |
| | G 108 | Interior Glasing Gasket 2mm | EPDM |
| | G 201 | Interior Glasing Gasket 4mm | EPDM |
| | G 202 | Interior Glasing Gasket 6mm | EPDM |
| | G 203 | Interior Glasing Gasket 8mm | EPDM |
| 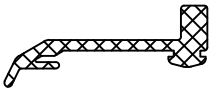 | R 112 | | EPDM |

# ACCESSORIES

| Drawing | Code | Description | Material |
|---|---|---|---|
| 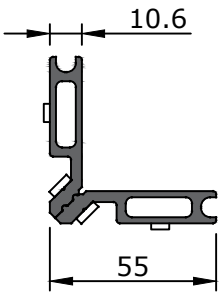 | 810-4 | 3022 & 3021Press Corner Cleat 23.6mm | Aluminium |
| | 810-6 | 3024 & 3032 & 3031 Press Corner Cleat 8.6mm | |
| 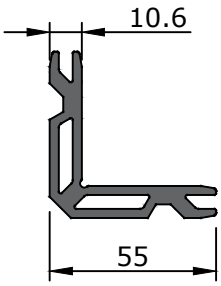 | 710-4 | 3022 & 3021Press Corner Cleat 23.6mm | |
| | 710-6 | 3024 & 3032 & 3031 Press Corner Cleat 8.6mm | |
| 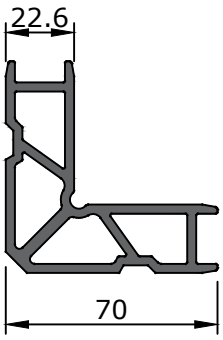 | 722-1 | 2022 & 2021Press Corner Cleat 19.6mm | |

| Glass Size | | |
|---|---|---|
| A(mm) | B | C |
| 20 | G 202 | 2055 |
| 22 | G 201 | 2055 |
| 24 | G 203 | 2056 |

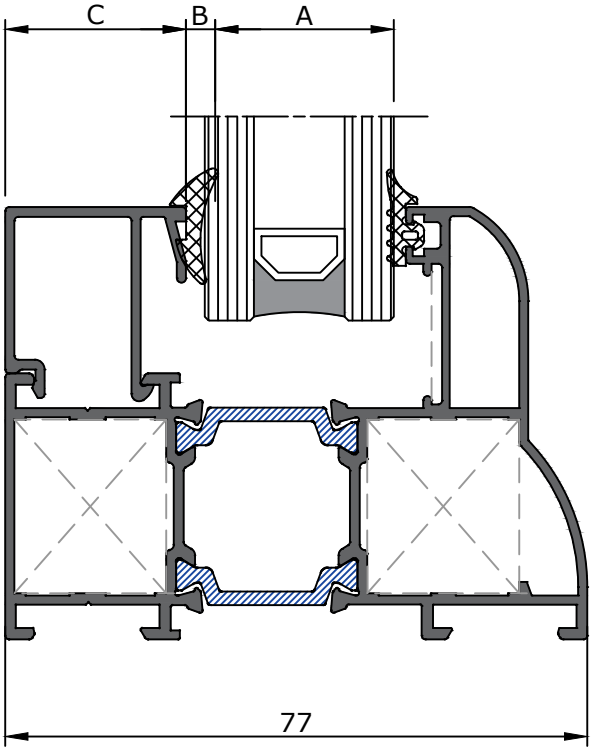

| Glass Size | |
|---|---|
| A(mm) | D |
| 20 | G 203 |
| 22 | G 202 |
| 24 | G 201 |

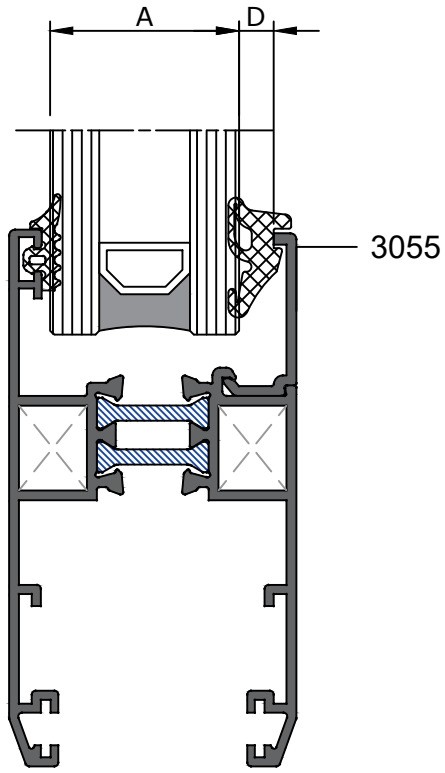

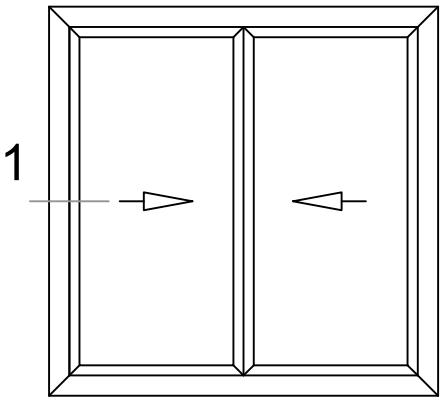
1

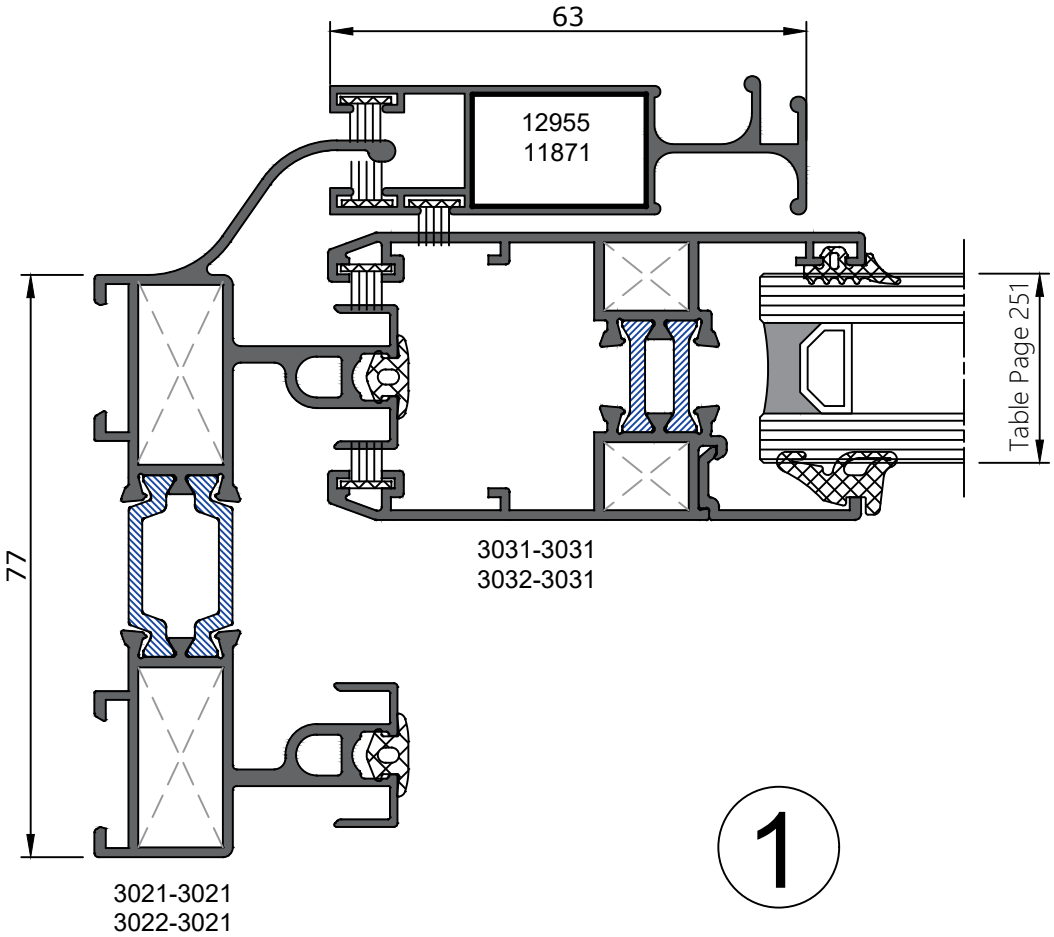
63
12955
11871
Table Page 251
77
3031-3031
3032-3031
3021-3021
3022-3021
1

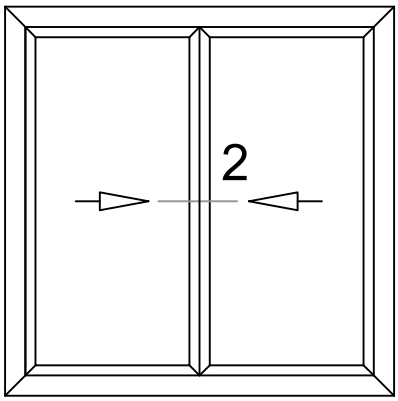


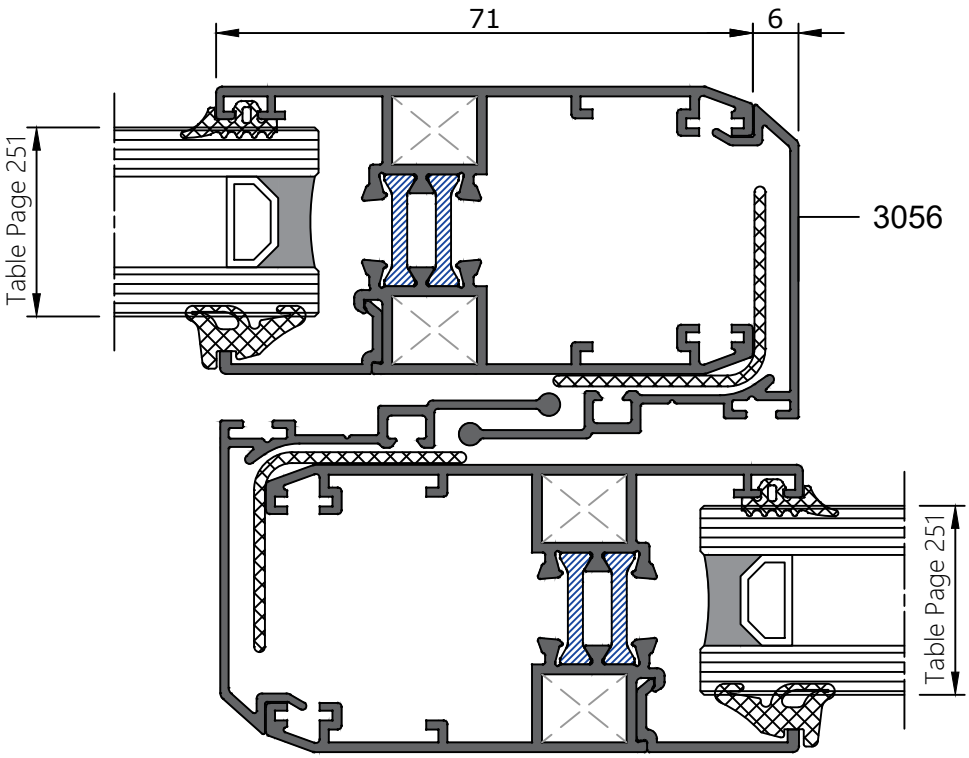


3031-3031
3032-3031

2

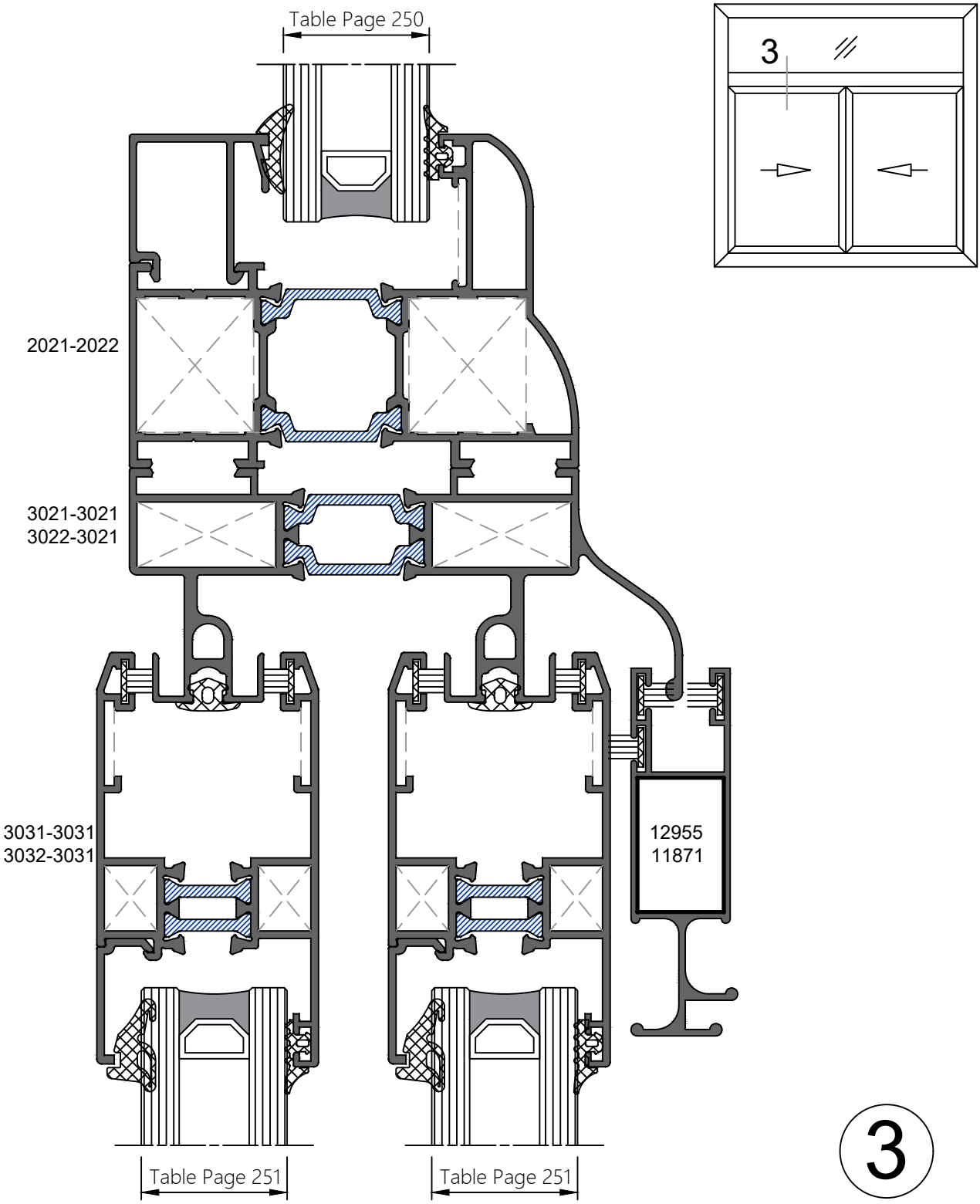
Table Page 250
3
2021-2022
3021-3021
3022-3021
3031-3031
3032-3031
12955
11871
Table Page 251
Table Page 251
3

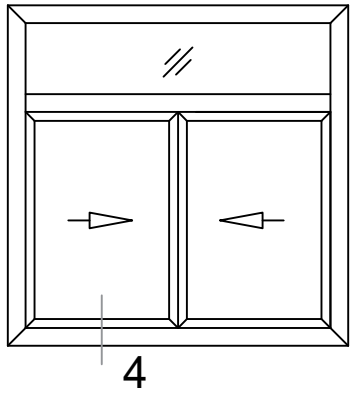
4

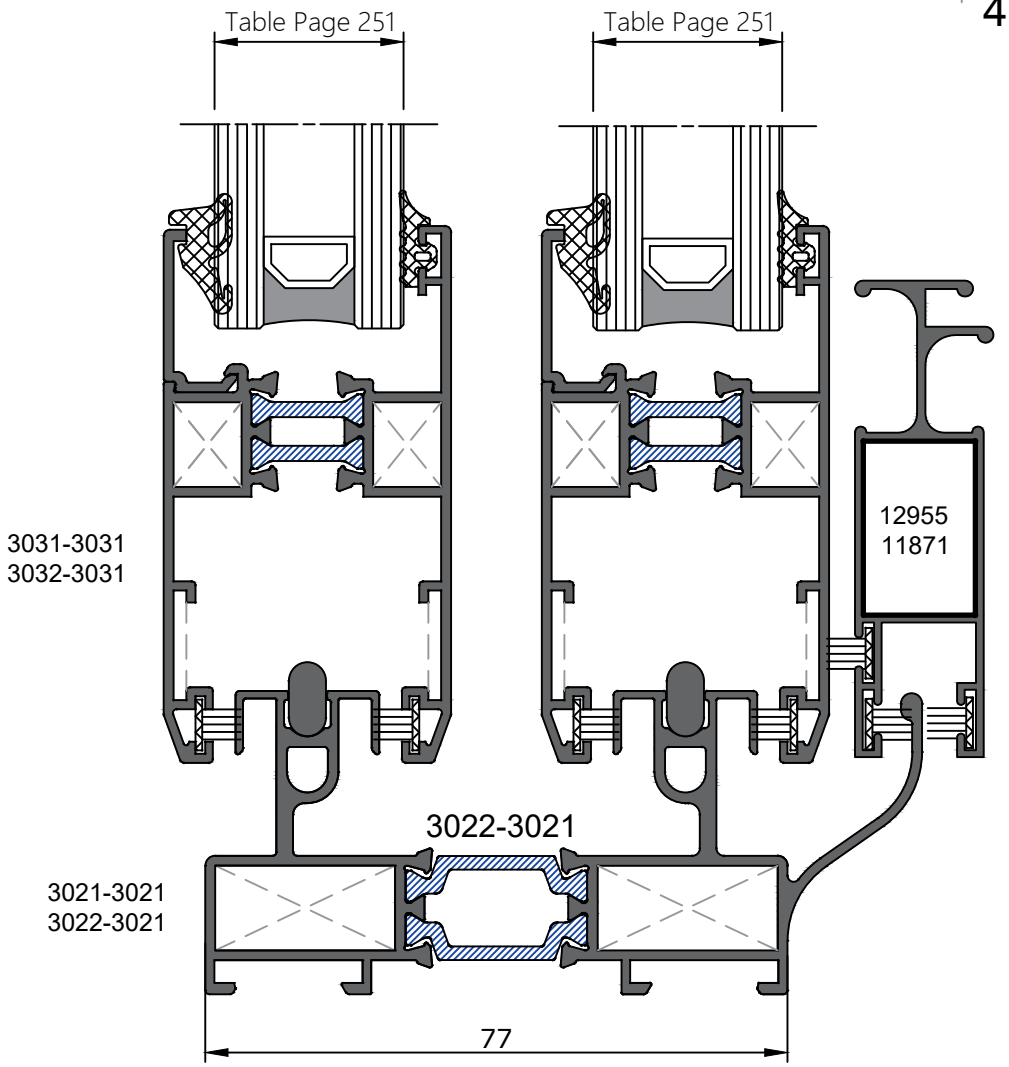
Table Page 251
Table Page 251
3031-3031
3032-3031
12955
11871
3022-3021
3021-3021
3022-3021
77

4

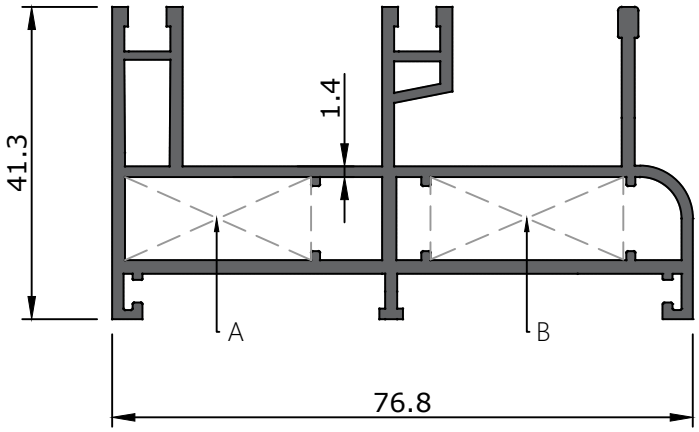


| Profile Name | Profile Code | Weight (Kg/m) |
|---|---|---|
| Frame Profile | 16025A | 1.450 |

| Corner Cleat | A | B |
|---|---|---|
| 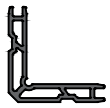 | 810-3<br>24.2mm | 810-2<br>25.2mm |

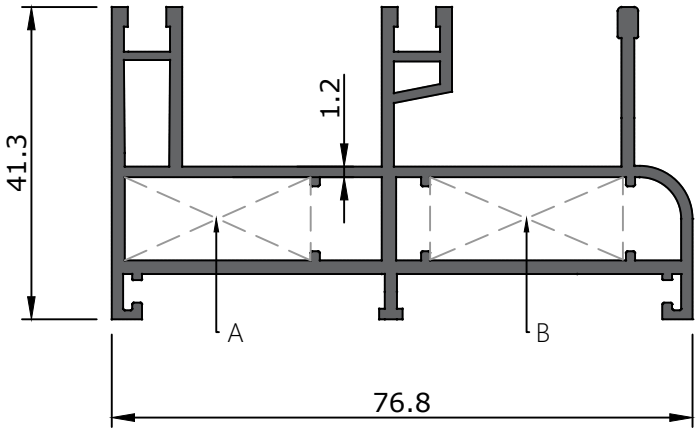


| Profile Name | Profile Code | Weight (Kg/m) |
|---|---|---|
| Frame Profile | 16025B | 1.290 |

| Corner Cleat | A | B |
|---|---|---|
| 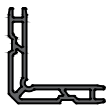 | 810-3<br>24.2mm | 810-2<br>25.2mm |

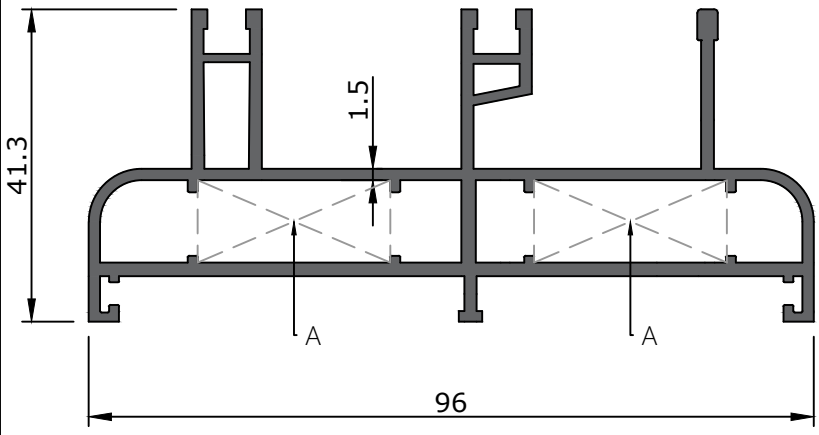


| Profile Name | Profile Code | Weight (Kg/m) |
|---|---|---|
| Frame Profile | 15332A | 1.631 |

| Corner Cleat | A |
|---|---|
| 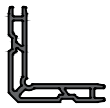 | 810-2<br>25.2mm |

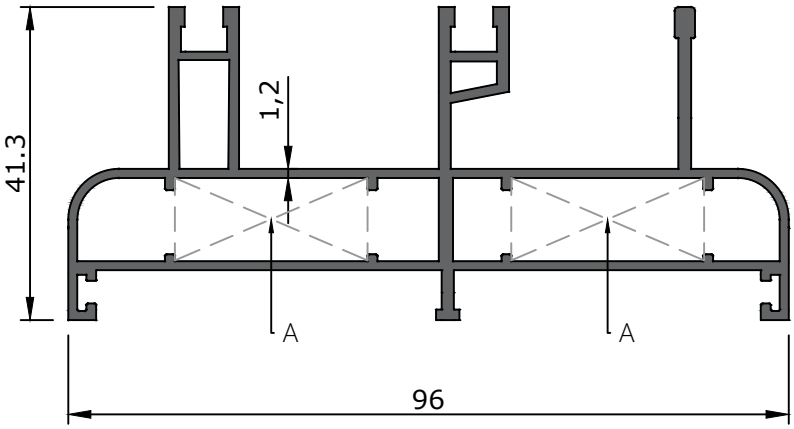


| Profile Name | Profile Code | Weight (Kg/m) |
|---|---|---|
| Frame Profile | 15332B | 1.370 |

| Corner Cleat | A |
|---|---|
| 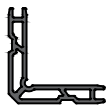 | 810-2<br>25.2mm |

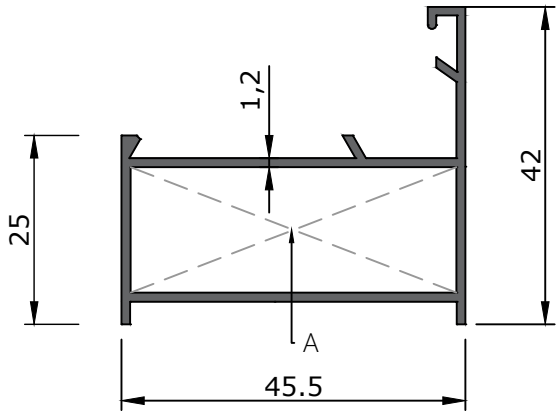


| Profile Name | Profile Code | Weight (Kg/m) |
|---|---|---|
| Frame Profile | 2401 | 0.540 |

| Corner Cleat | A |
|---|---|
| 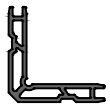 | 715-1<br>42.6mm |

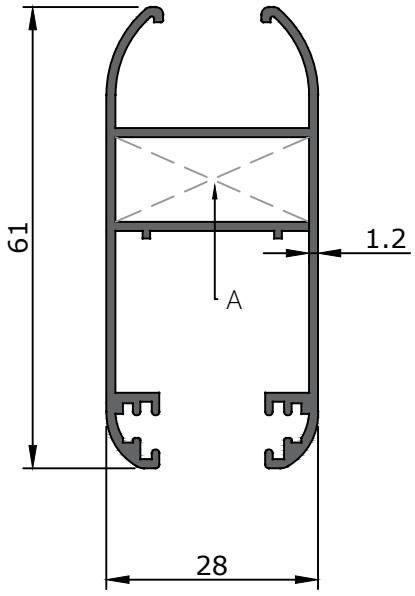


| Profile Name | Profile Code | Weight (Kg/m) |
|---|---|---|
| Sash Profile | 3508 | 0.715 |

| Corner Cleat | A |
|---|---|
| 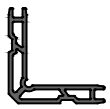 | 810-2<br>25.2mm |

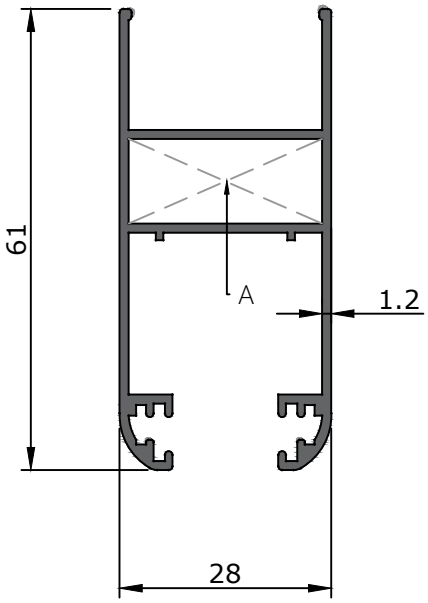


| Profile Name | Profile Code | Weight (Kg/m) |
|---|---|---|
| Sash Profile | 3509 | 0.690 |

| Corner Cleat | A |
|---|---|
| 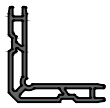 | 810-2<br>25.2mm |

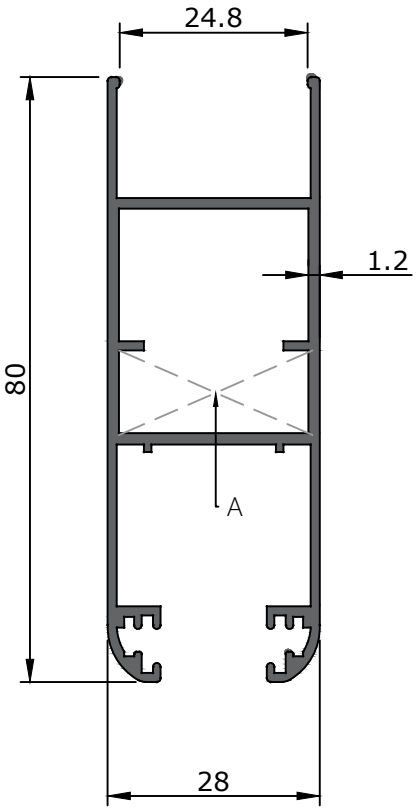


| Profile Name | Profile Code | Weight (Kg/m) |
|---|---|---|
| Sash Profile | 13469 | 0.830 |

| Corner Cleat | A |
|---|---|
| 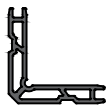 | 810-2<br>25.2mm |

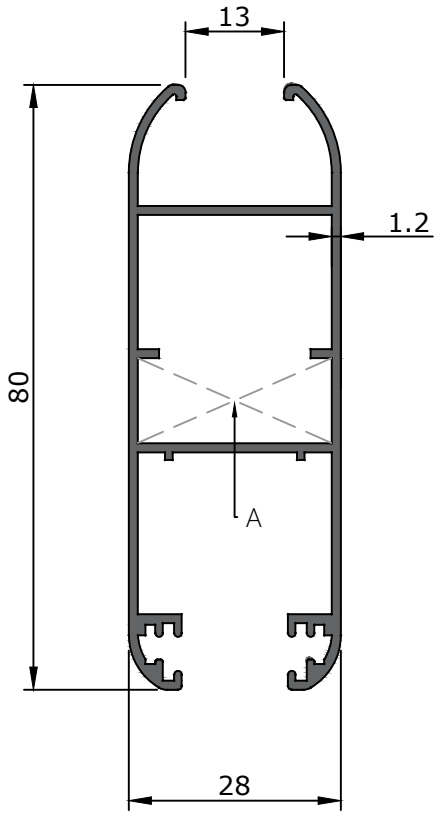


| Profile Name | Profile Code | Weight (Kg/m) |
|---|---|---|
| Sash Profile | 13470 | 0.842 |

| Corner Cleat | A |
|---|---|
| 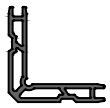 | 810-2<br>25.2mm |

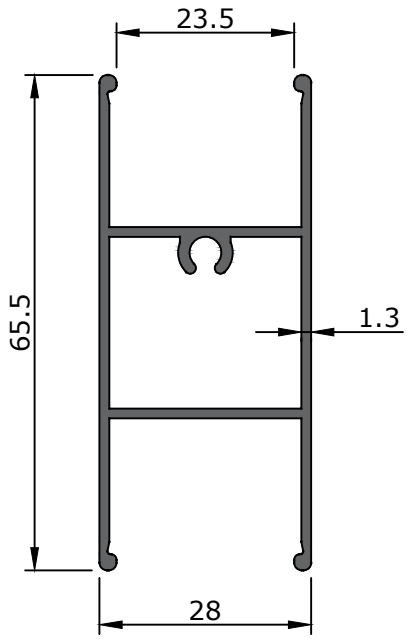


| Profile Name | Profile Code | Weight (Kg/m) |
|---|---|---|
| Tripetalous Profile | 3515 | 0.700 |

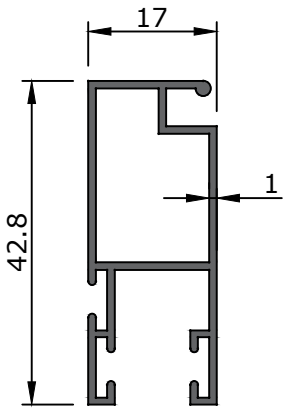


| Profile Name | Profile Code | Weight (Kg/m) |
|---|---|---|
| Grid Vent | 11871 | 0.390 |

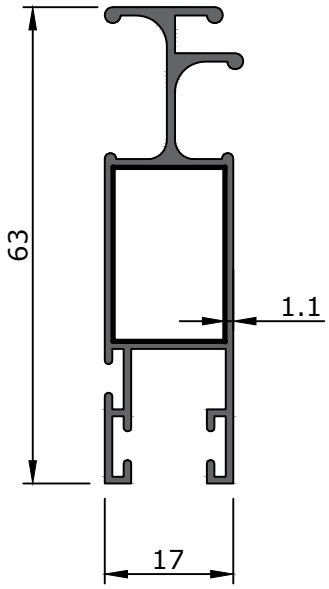


| Profile Name | Profile Code | Weight (Kg/m) |
|---|---|---|
| Grid Vent | 12955 | 0.560 |

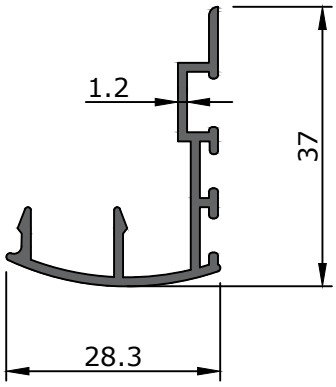


| Profile Name | Profile Code | Weight (Kg/m) |
|---|---|---|
| Gap | 901 | 0.318 |

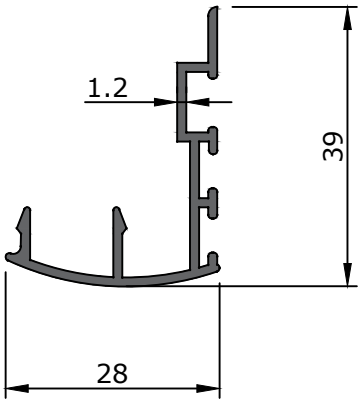


| Profile Name | Profile Code | Weight (Kg/m) |
|---|---|---|
| Gap | 3532 | 0.330 |

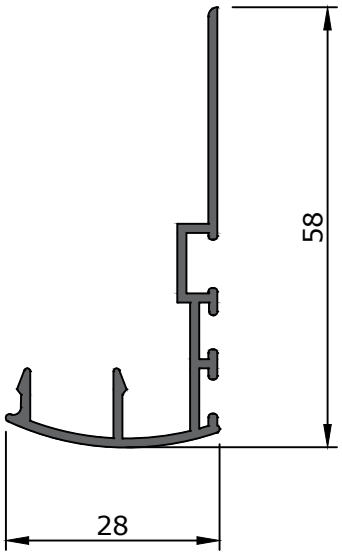


| Profile Name | Profile Code | Weight (Kg/m) |
|---|---|---|
| Gap | 13475 | 0.384 |

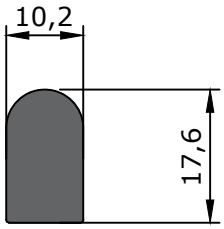


| Profile Name | Profile Code | Weight (Kg/m) |
|---|---|---|
| Rail Profile | 15667 | 0.114 |

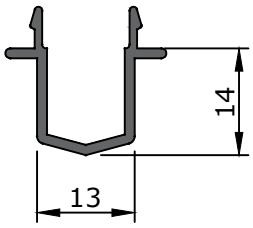


| Profile Name | Profile Code | Weight (Kg/m) |
|---|---|---|
| Adjoining | 3523 | 0.187 |

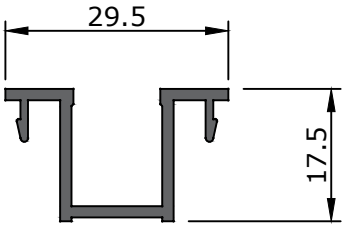


| Profile Name | Profile Code | Weight (Kg/m) |
|---|---|---|
| Adjoining | 3524 | 0.286 |

| ACCESSORIES | | | |
|---|---|---|---|
| Drawing | Code | Description | Material |
| | G 309 | Glasing Gasket | EPDM |
| | B 42 | Brush Gasket | EPDM |
| | G 108 | Interior Glasing Gasket 2mm | EPDM |
| | G 201 | Interior Glasing Gasket 4mm | EPDM |
| | G 202 | Interior Glasing Gasket 6mm | EPDM |

# ACCESSORIES

| Drawing | Code | Description | Material |
|---|---|---|---|
| 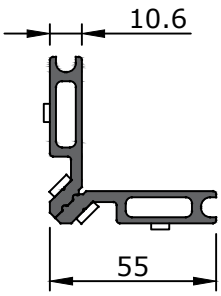 | 810-1 | 3502 & 3501Press Corner Cleat 26.6mm | Aluminium |
| | 810-2 | 3509 & 3508 & 3503 Press Corner Cleat 25.2mm | |
| 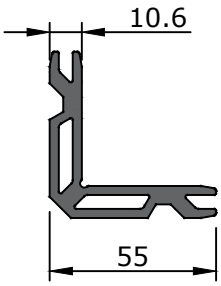 | 710-1 | 3502 & 3501Press Corner Cleat 26.6mm | |
| | 710-2 | 3509 & 3508 & 3503 Press Corner Cleat 25.2mm | |
| 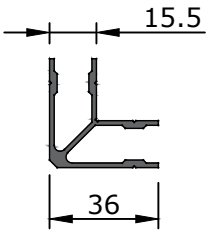 | 715-1 | 2401Press Corner Cleat 42.6mm | |

| Glass Size | |
|---|---|
| A(mm) | B |
| 4 | G 202 |
| 6 | G 201 |
| 8 | G 108 |

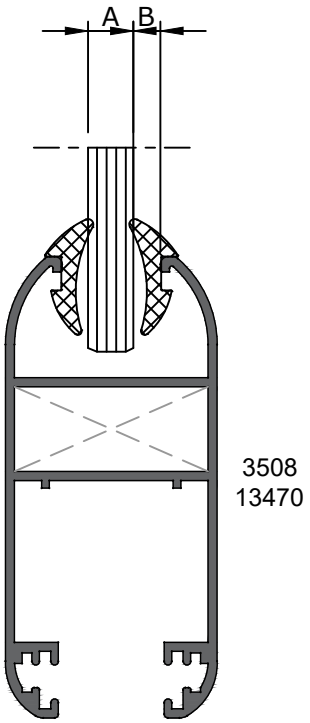

| Glass Size | |
|---|---|
| A(mm) | D |
| 16 | G 202 |
| 18 | G 201 |
| 20 | G 108 |

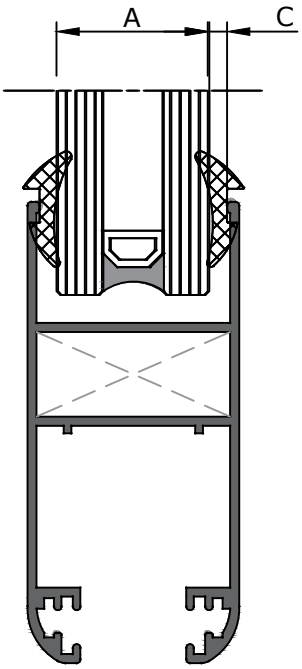

| Glass Size | | |
|---|---|---|
| A(mm) | B | C |
| 6 | G 202 | 2452 |
| 8 | G 201 | 2452 |
| 18 | G 202 | 2451 |
| 20 | G 201 | 2451 |

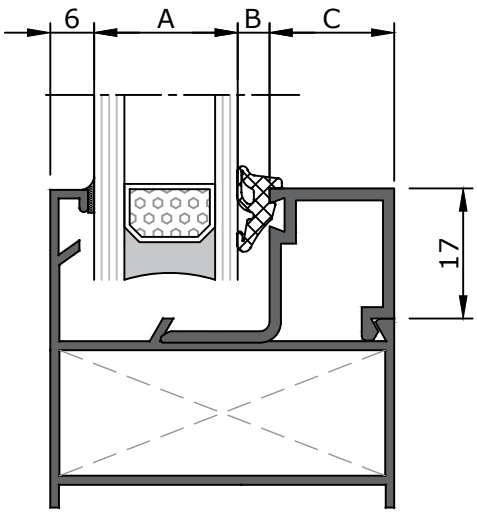

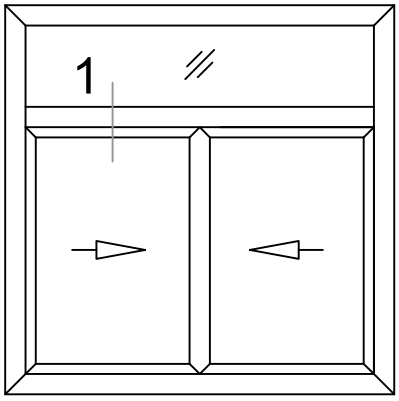
1

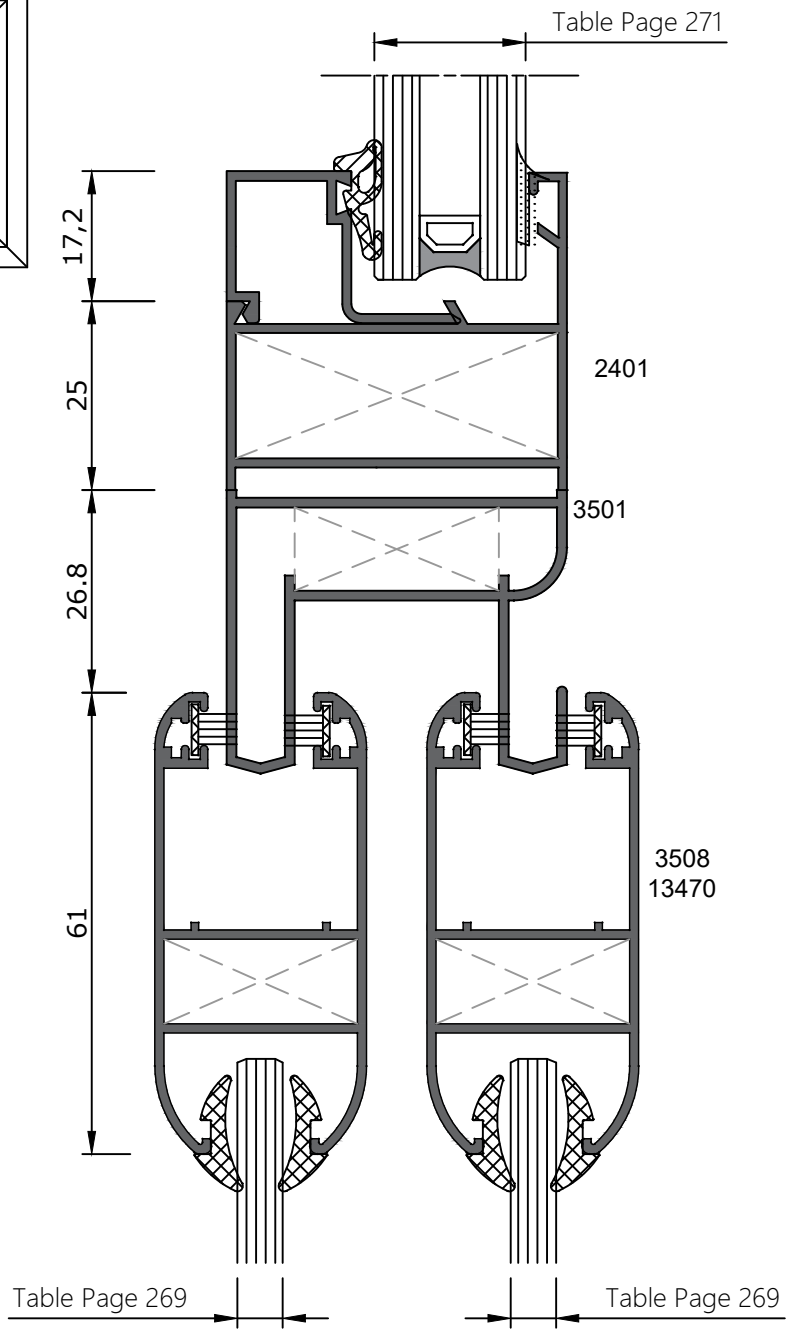
Table Page 271
17,2
25
26.8
61
2401
3501
3508
13470
Table Page 269
Table Page 269

1

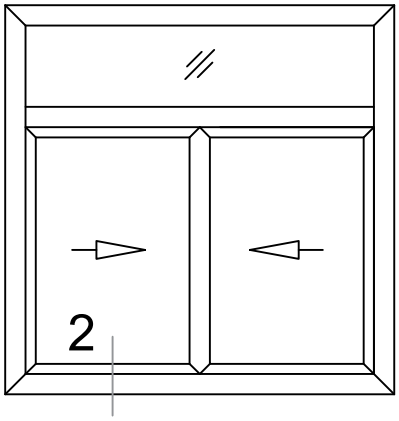
2

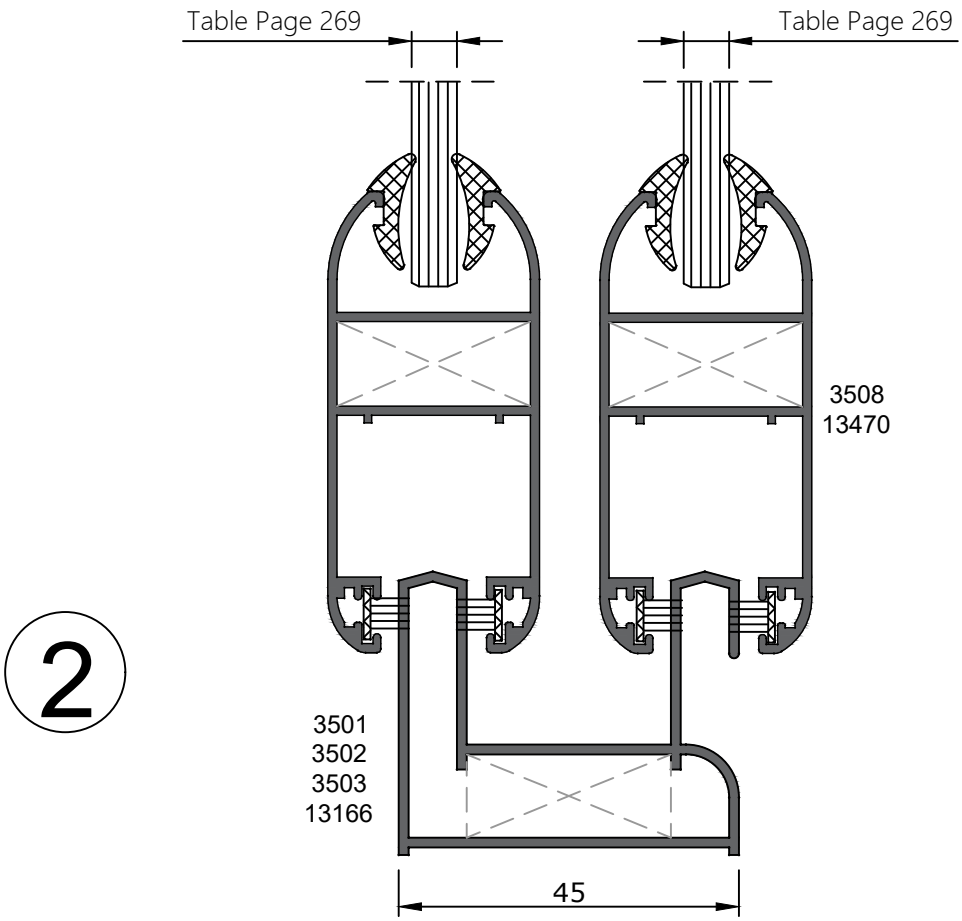
Table Page 269
Table Page 269
3508
13470
2
3501
3502
3503
13166
45

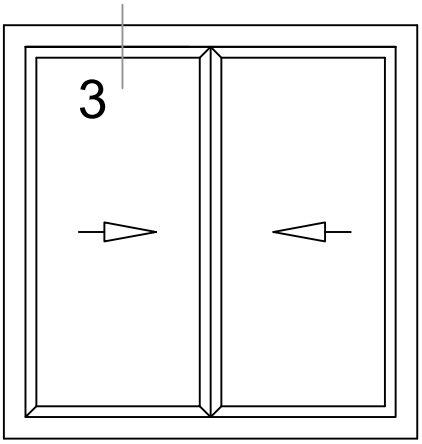
3

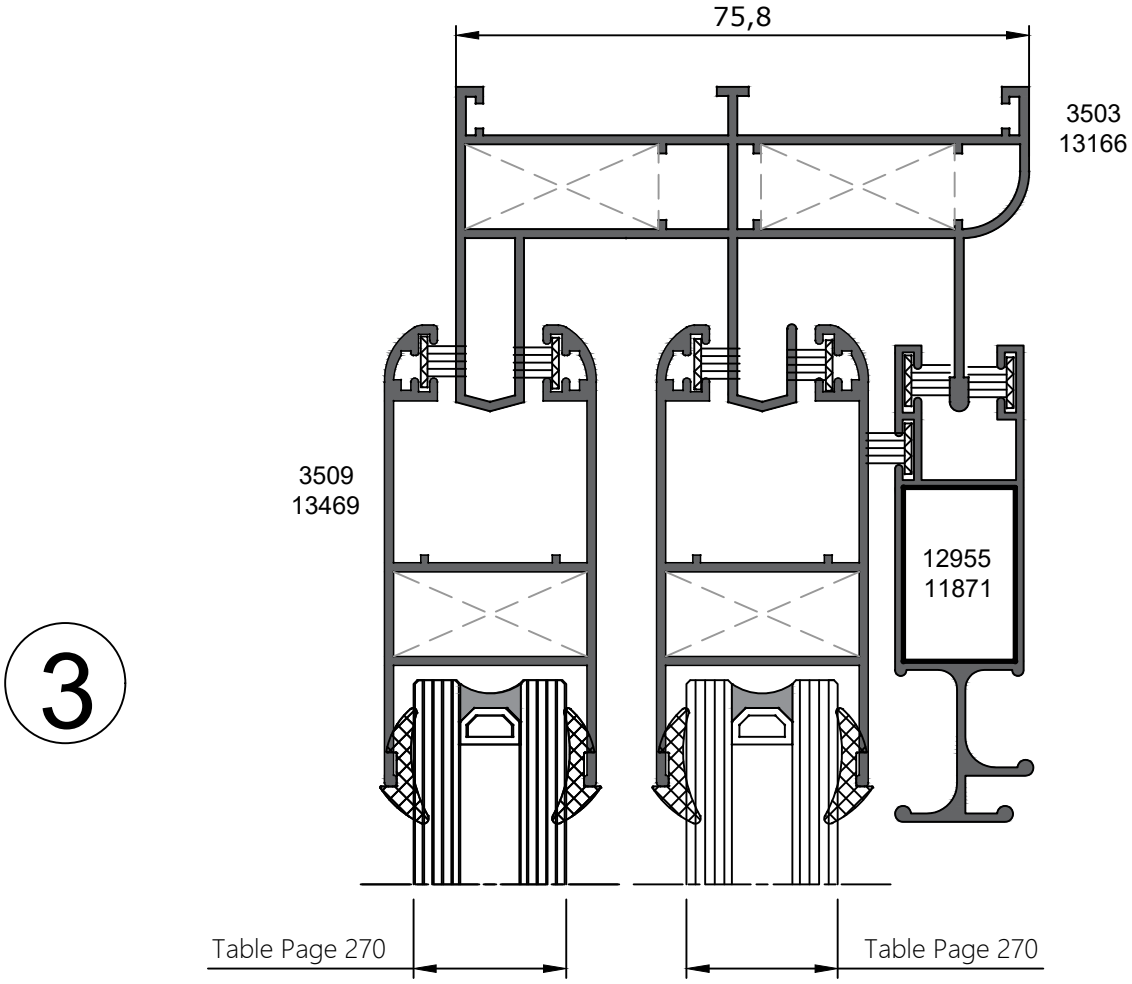
75,8
3503
13166
3509
13469
12955
11871
3
Table Page 270
Table Page 270

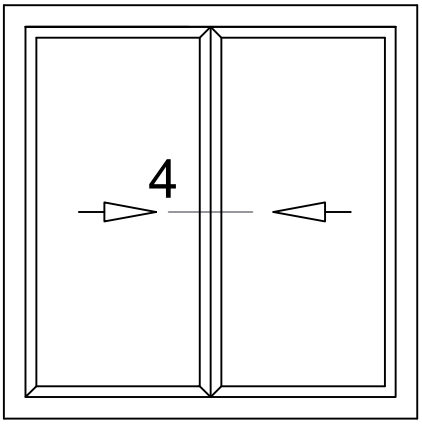


4

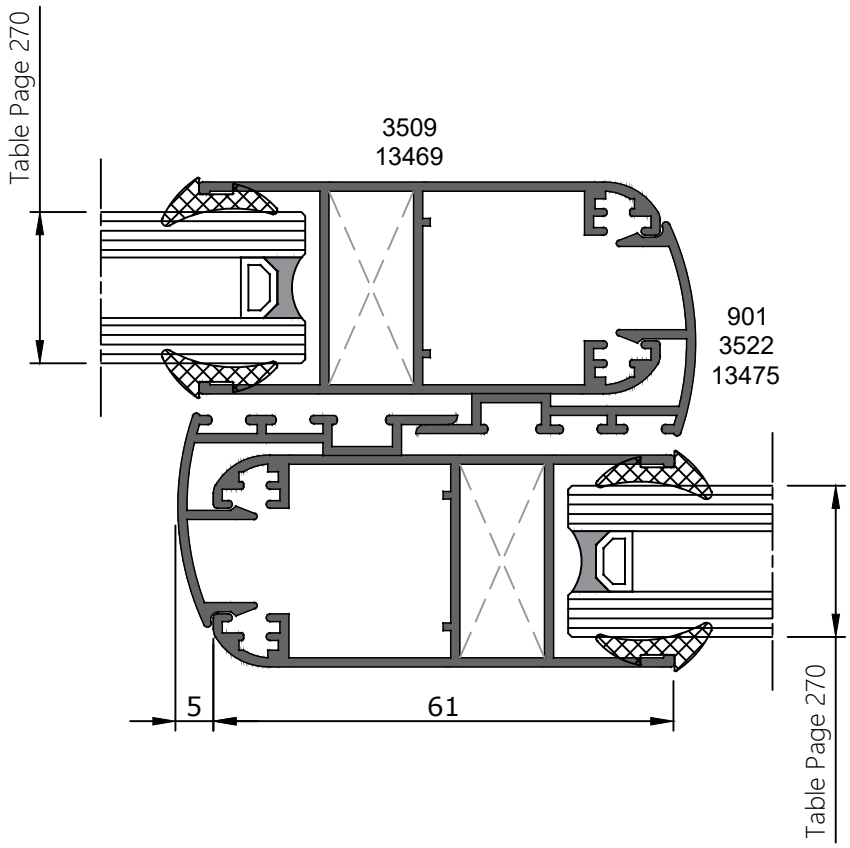

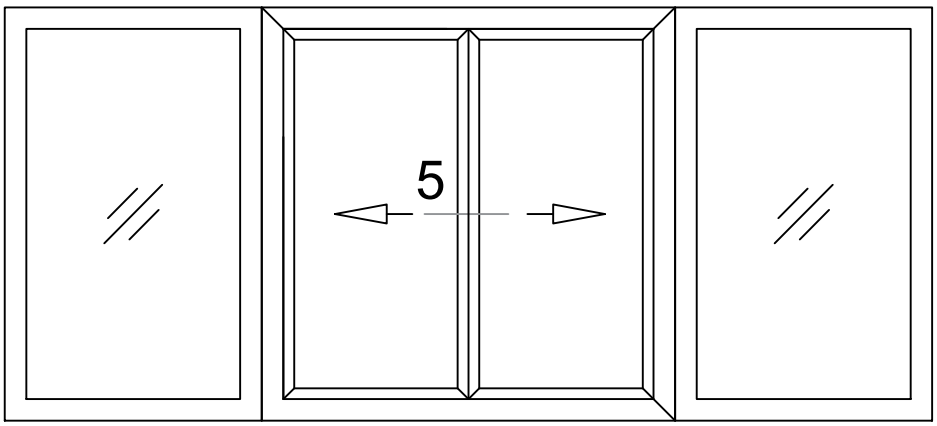
5

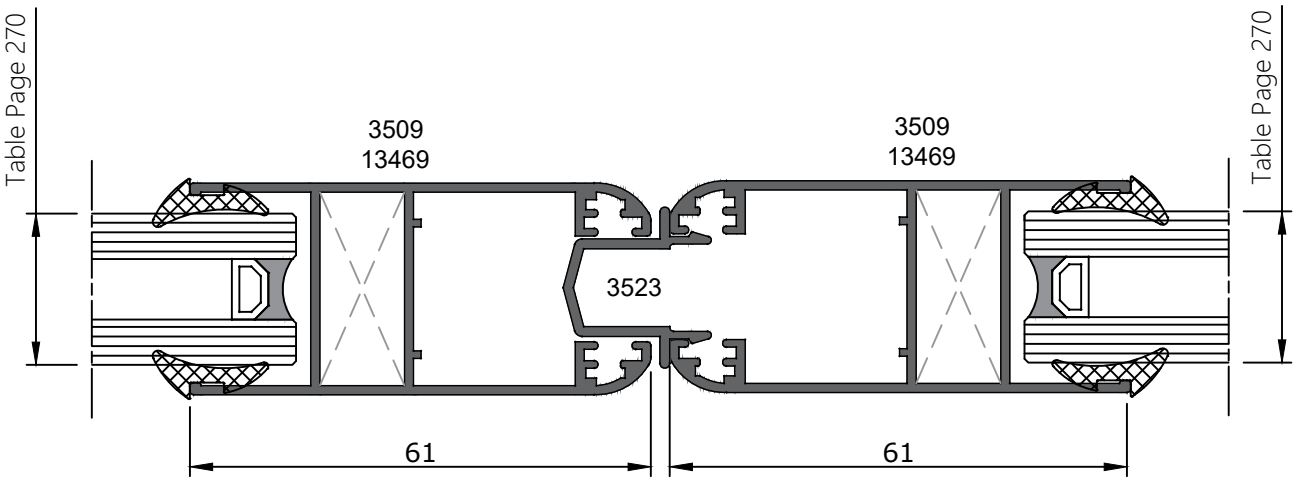
Table Page 270
3509
13469
3523
3509
13469
Table Page 270
61
61

5

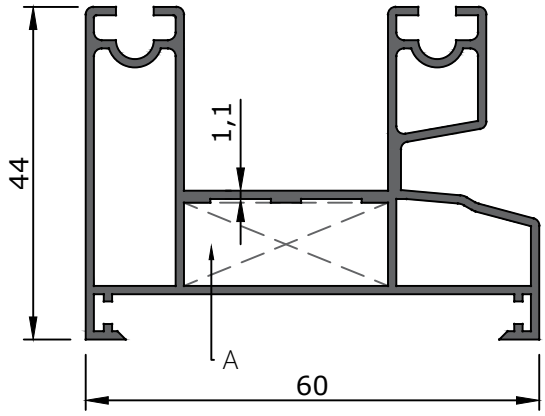


| Profile Name | Profile Code | Weight (Kg/m) |
|---|---|---|
| Frame Profile | 3701 | 0.962 |

| Corner Cleat | A |
|---|---|
| 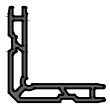 | 810-1<br>26.6mm |

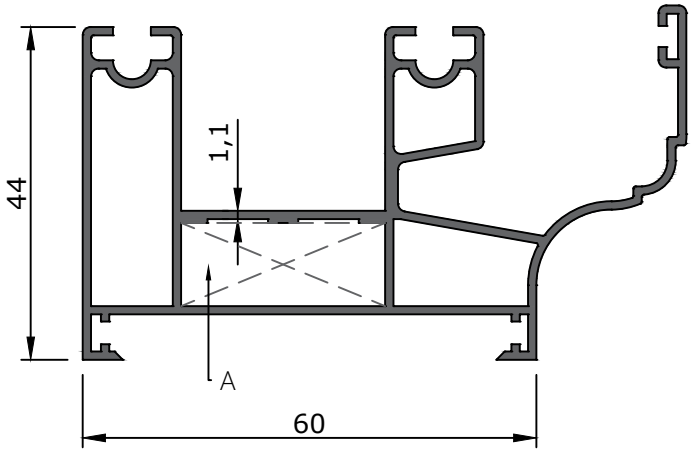


| Profile Name | Profile Code | Weight (Kg/m) |
|---|---|---|
| Frame Profile | 3702 | 1.125 |

| Corner Cleat | A |
|---|---|
| 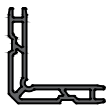 | 810-1<br>26.6mm |

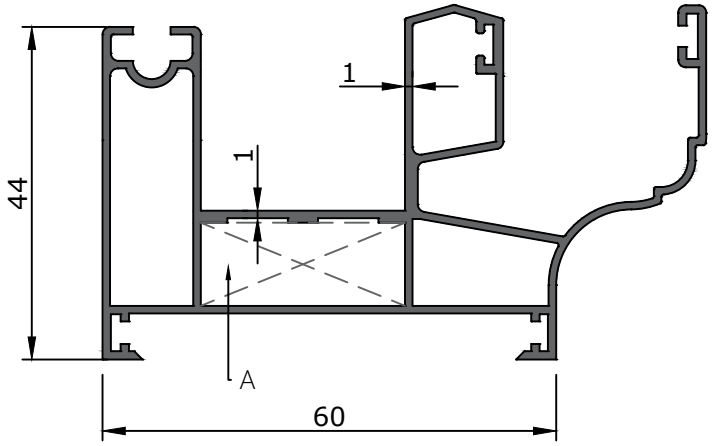


| Profile Name | Profile Code | Weight (Kg/m) |
|---|---|---|
| Frame Profile | 3703 | 1.050 |

| Corner Cleat | A |
|---|---|
| 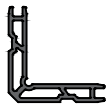 | 810-1<br>26.6mm |

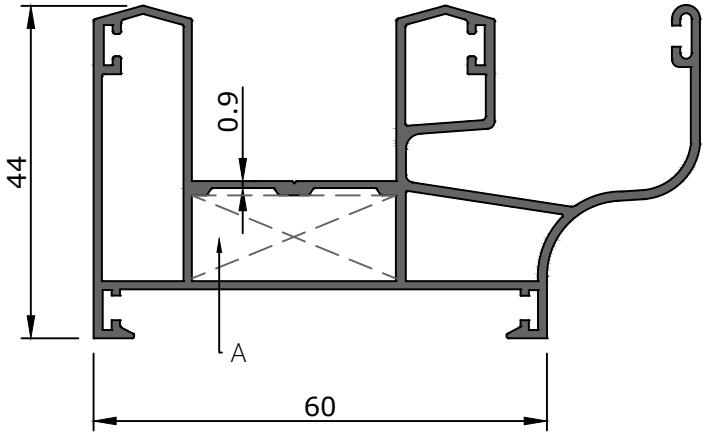


| Profile Name | Profile Code | Weight (Kg/m) |
|---|---|---|
| Frame Profile | 3705 | 1.160 |

| Corner Cleat | A |
|---|---|
| 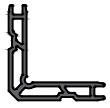 | 810-1<br>26.6mm |

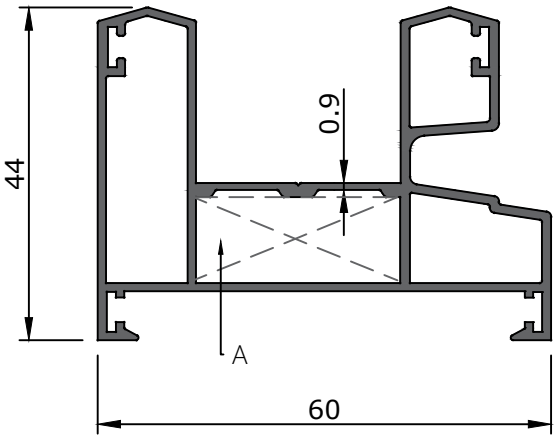


| Profile Name | Profile Code | Weight (Kg/m) |
|---|---|---|
| Frame Profile | 3706 | 1.010 |

| Corner Cleat | A |
|---|---|
| 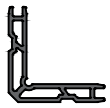 | 810-1<br>26.6mm |

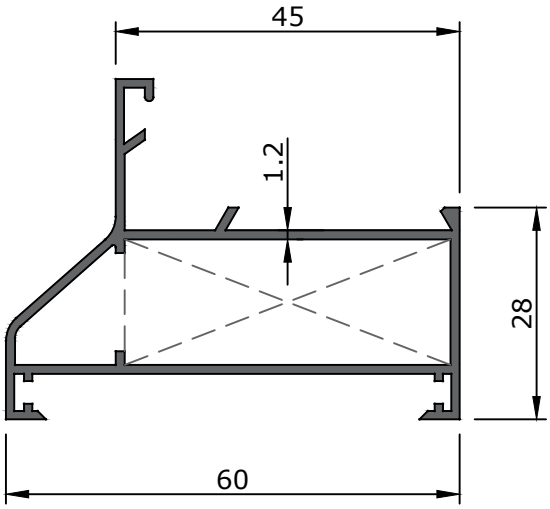


| Profile Name | Profile Code | Weight (Kg/m) |
|---|---|---|
| Frame Profile | 3704 | 0.670 |

| Corner Cleat | A |
|---|---|
| 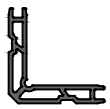 | 715-1<br>42.6mm |

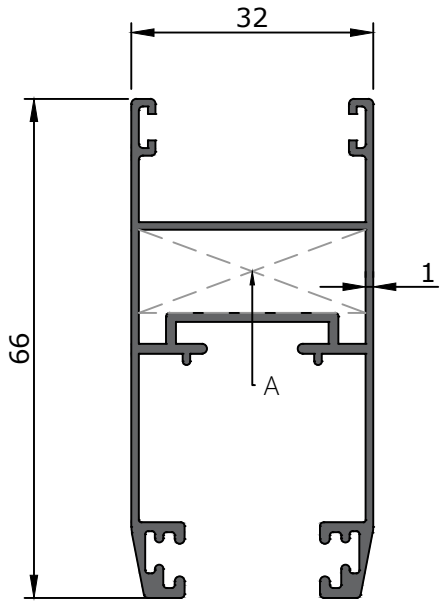


| Profile Name | Profile Code | Weight (Kg/m) |
|---|---|---|
| Sash Profile | 3708 | 0.770 |

| Corner Cleat | A |
|---|---|
| 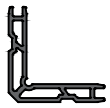 | 810-3<br>29mm |

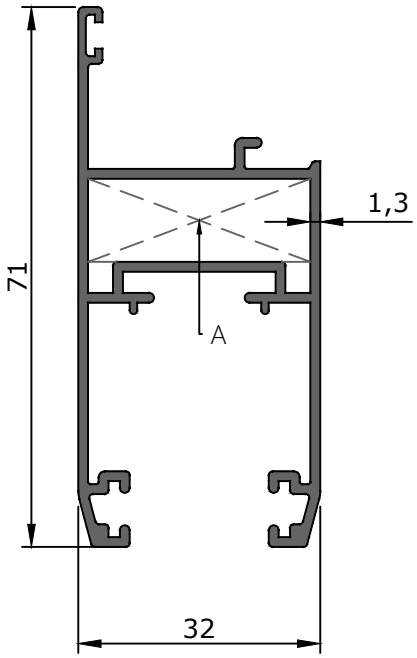


| Profile Name | Profile Code | Weight (Kg/m) |
|---|---|---|
| Frame Profile | 3709 | 0.845 |

| Corner Cleat | A |
|---|---|
| 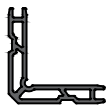 | 810-3<br>29mm |

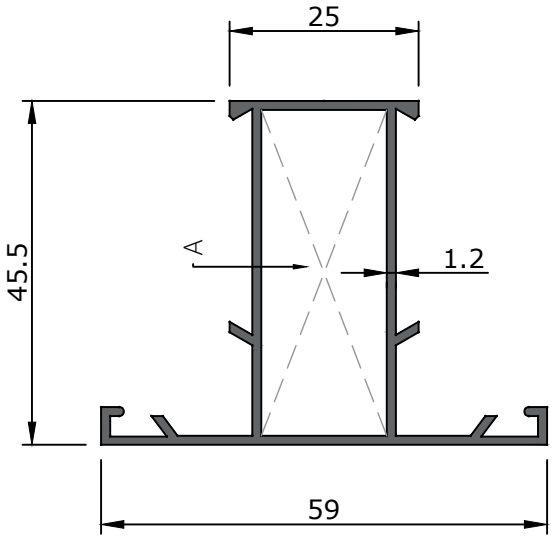


| Profile Name | Profile Code | Weight (Kg/m) |
|---|---|---|
| Mullion Profile | 2415 | 0.645 |

| Corner Cleat | A |
|---|---|
| 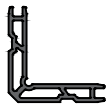 | 715-1<br>42.6mm |

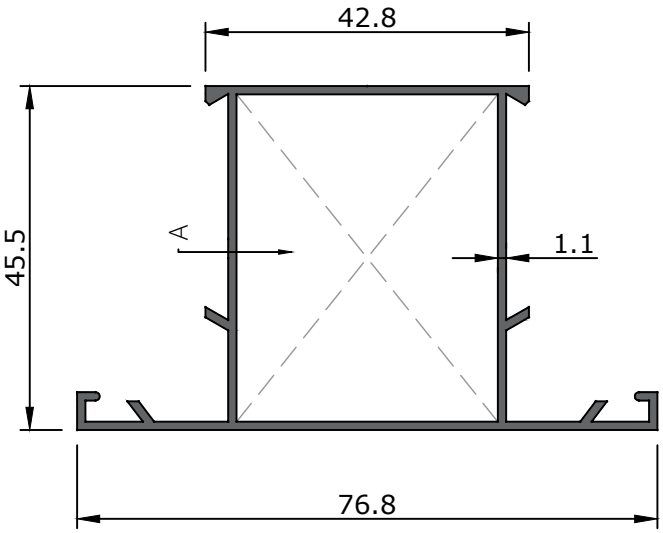


| Profile Name | Profile Code | Weight (Kg/m) |
|---|---|---|
| Mullion Profile | 2416A | 0.710 |

| Corner Cleat | A |
|---|---|
| 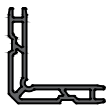 | 732-1<br>42.6mm |

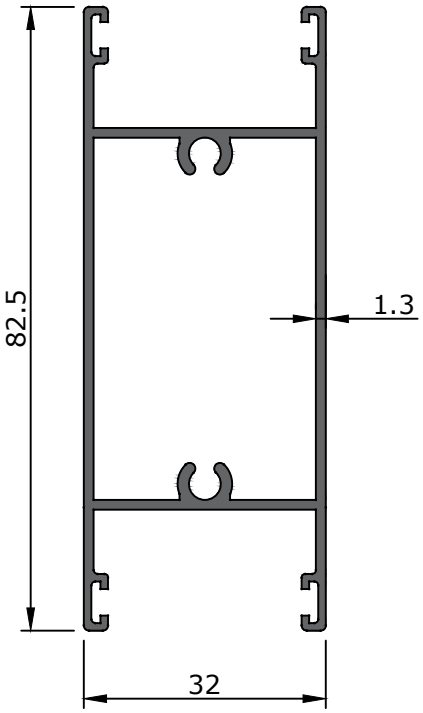


| Profile Name | Profile Code | Weight (Kg/m) |
|---|---|---|
| Tripetalous Profile | 3715 | 0.920 |

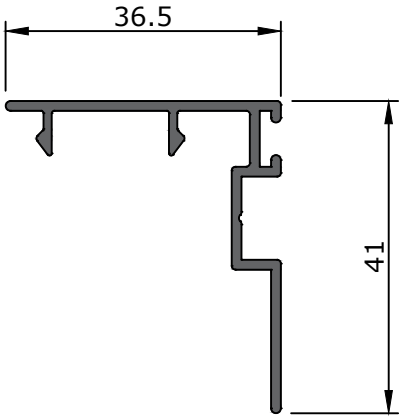


| Profile Name | Profile Code | Weight (Kg/m) |
|---|---|---|
| Gap Vent | 3722 | 0.355 |

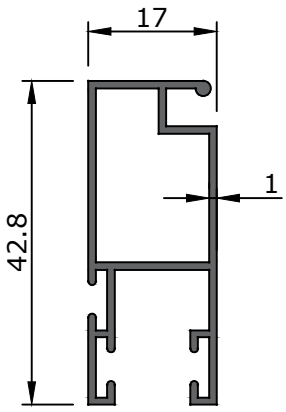


| Profile Name | Profile Code | Weight (Kg/m) |
|---|---|---|
| Grid Vent | 11871 | 0.390 |

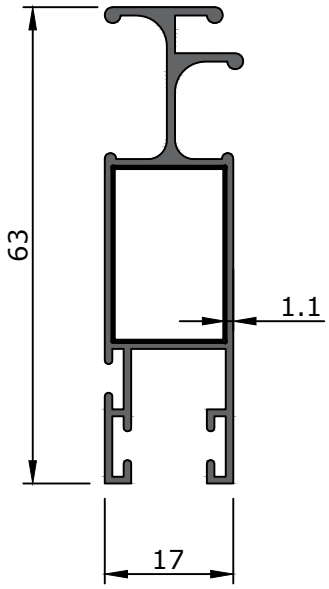


| Profile Name | Profile Code | Weight (Kg/m) |
|---|---|---|
| Grid Vent | 12955 | 0.560 |

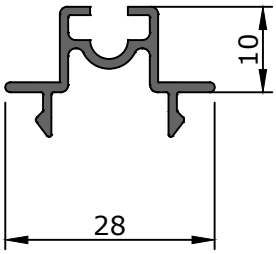


| Profile Name | Profile Code | Weight (Kg/m) |
|---|---|---|
| Sash Adjoining Profile | 3758 | 0.222 |

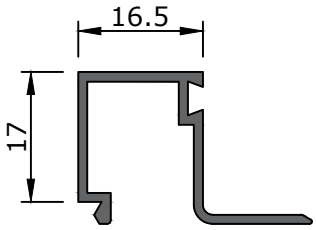


| Profile Name | Profile Code | Weight (Kg/m) |
|---|---|---|
| Glazing Bead | 2451 | 0.260 |

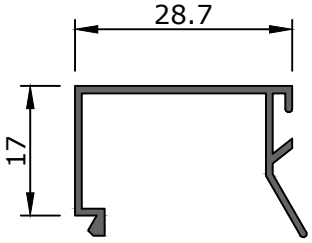


| Profile Name | Profile Code | Weight (Kg/m) |
|---|---|---|
| Glazing Bead | 2452 | 0.210 |

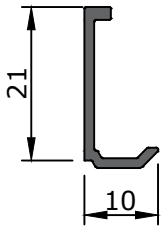


| Profile Name | Profile Code | Weight (Kg/m) |
|---|---|---|
| Glazing Bead | 3055 | 0.116 |

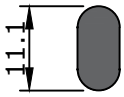


| Profile Name | Profile Code | Weight (Kg/m) |
|---|---|---|
| Rail Profile | 3057 | 0.134 |

| ACCESSORIES | | | |
|---|---|---|---|
| Drawing | Code | Description | Material |
| | G 309 | Glasing Gasket | EPDM |
| | B 42 | Brush Gasket | EPDM |
| | G 108 | Interior Glasing Gasket 2mm | EPDM |
| | G 201 | Interior Glasing Gasket 4mm | EPDM |
| | G 202 | Interior Glasing Gasket 6mm | EPDM |
| | G 203 | Interior Glasing Gasket 8mm | EPDM |

# ACCESSORIES

| | NO. | Description | Material |
|---|---|---|---|
| 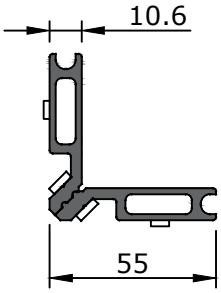 | 810-1 | & 3705 & 3702 & 3701 3706Press Corner Cleat 26.6mm | Aluminium |
| | 810-2 | 3709 & 3708Press Corner Cleat 29mm | |
| 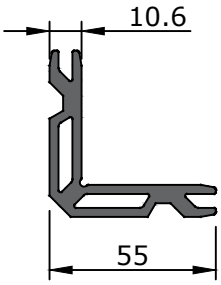 | 710-1 | & 3705 & 3702 & 3701 3706Press Corner Cleat 26.6mm | |
| | 710-2 | 3709 & 3708Press Corner Cleat 29mm | |
| 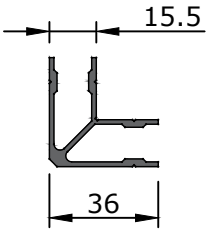 | 715-1 | 3704Press Corner Cleat 42.6mm | |

| Glass Size | | |
|---|---|---|
| A(mm) | B | C |
| 6 | G 201 | 2452 |
| 8 | G 202 | 2452 |
| 16 | G 202 | 2451 |
| 18 | G 201 | 2451 |
| 20 | G 108 | 2451 |

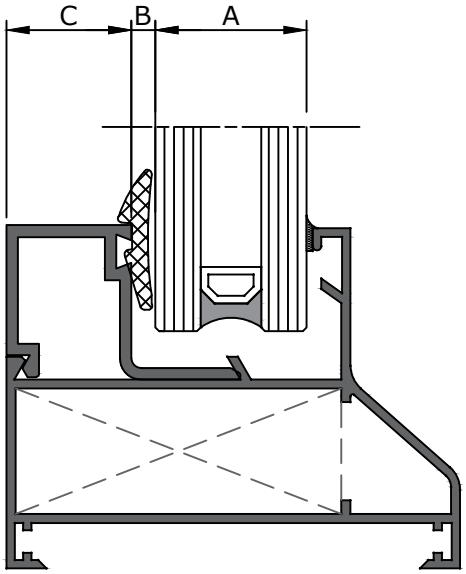

| Glass Size | | |
|---|---|---|
| A(mm) | D | E |
| 16 | G 203 | 3055 |
| 18 | G 202 | 3055 |
| 20 | G 201 | 3055 |

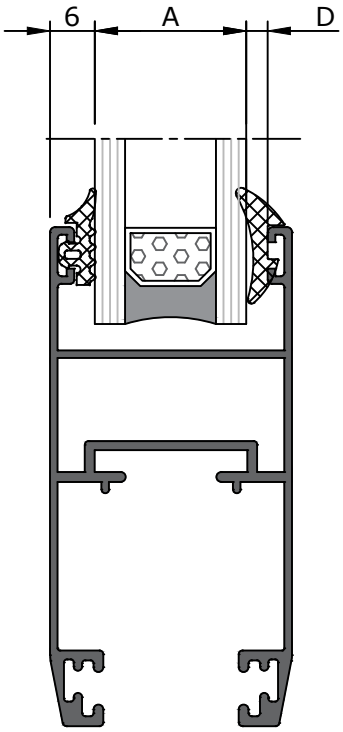

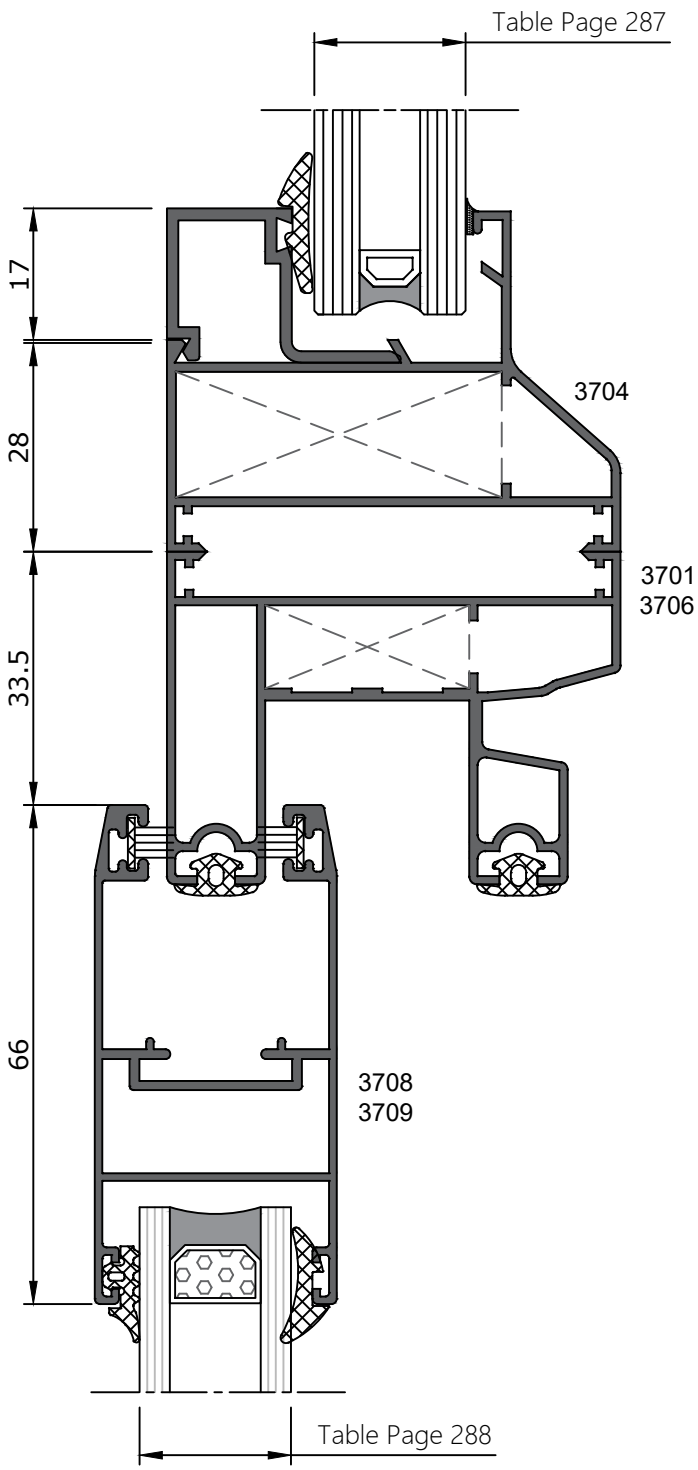
Table Page 287
17
28
33.5
66
3704
3701
3706
3708
3709
Table Page 288

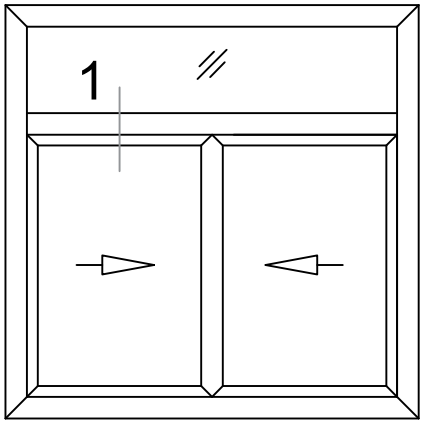
1

1

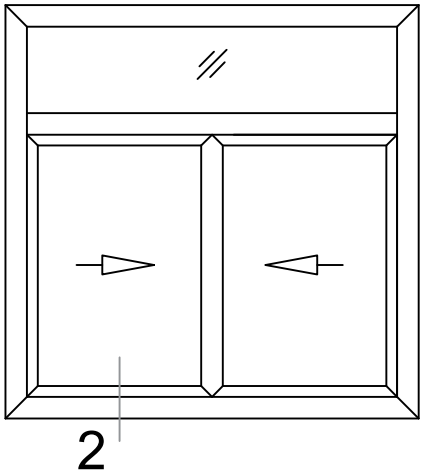


Table Page 288

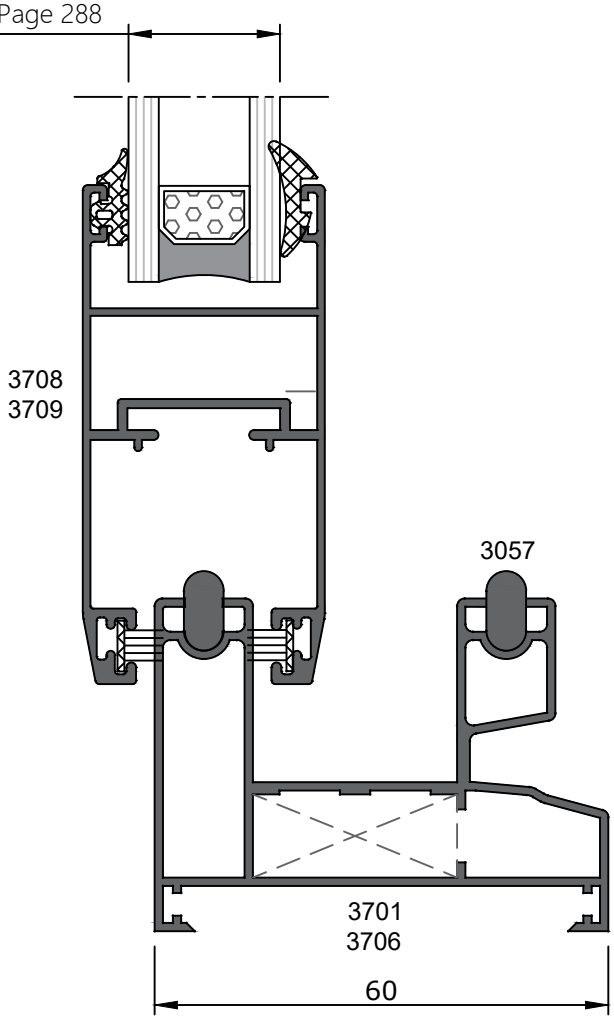


2

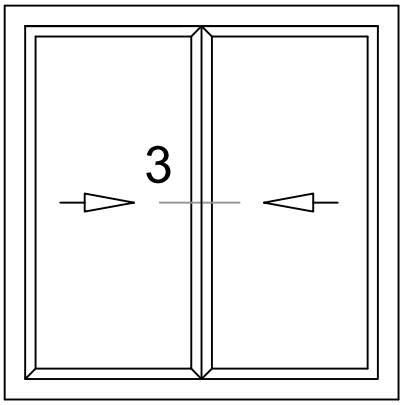
3

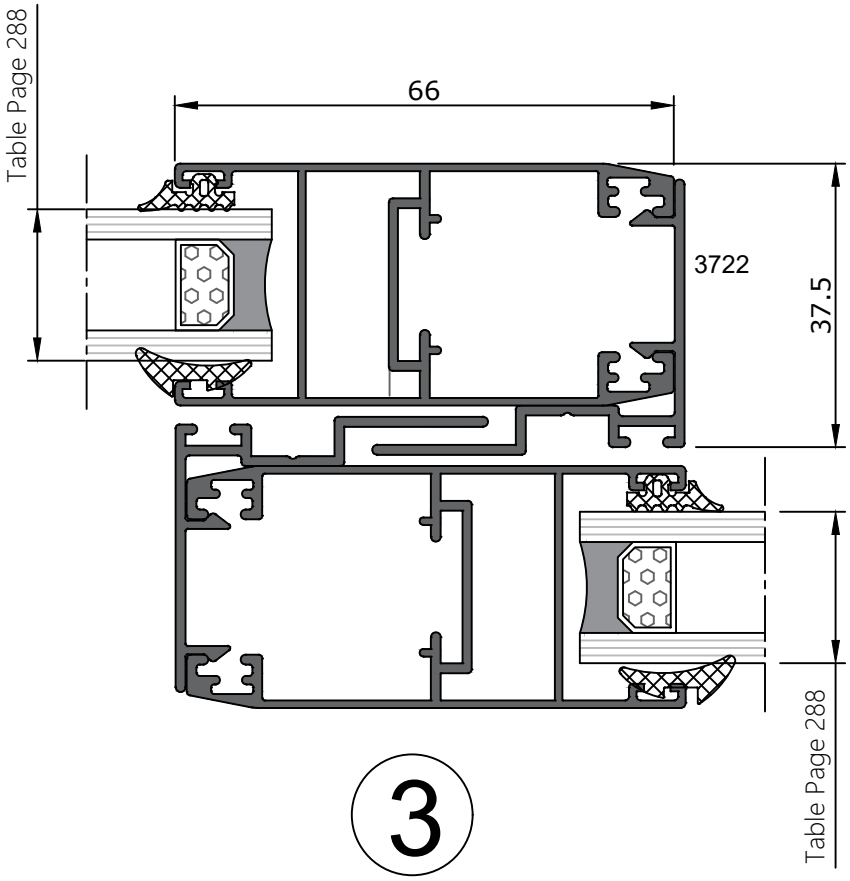
Table Page 288
66
3722
37.5
Table Page 288
3

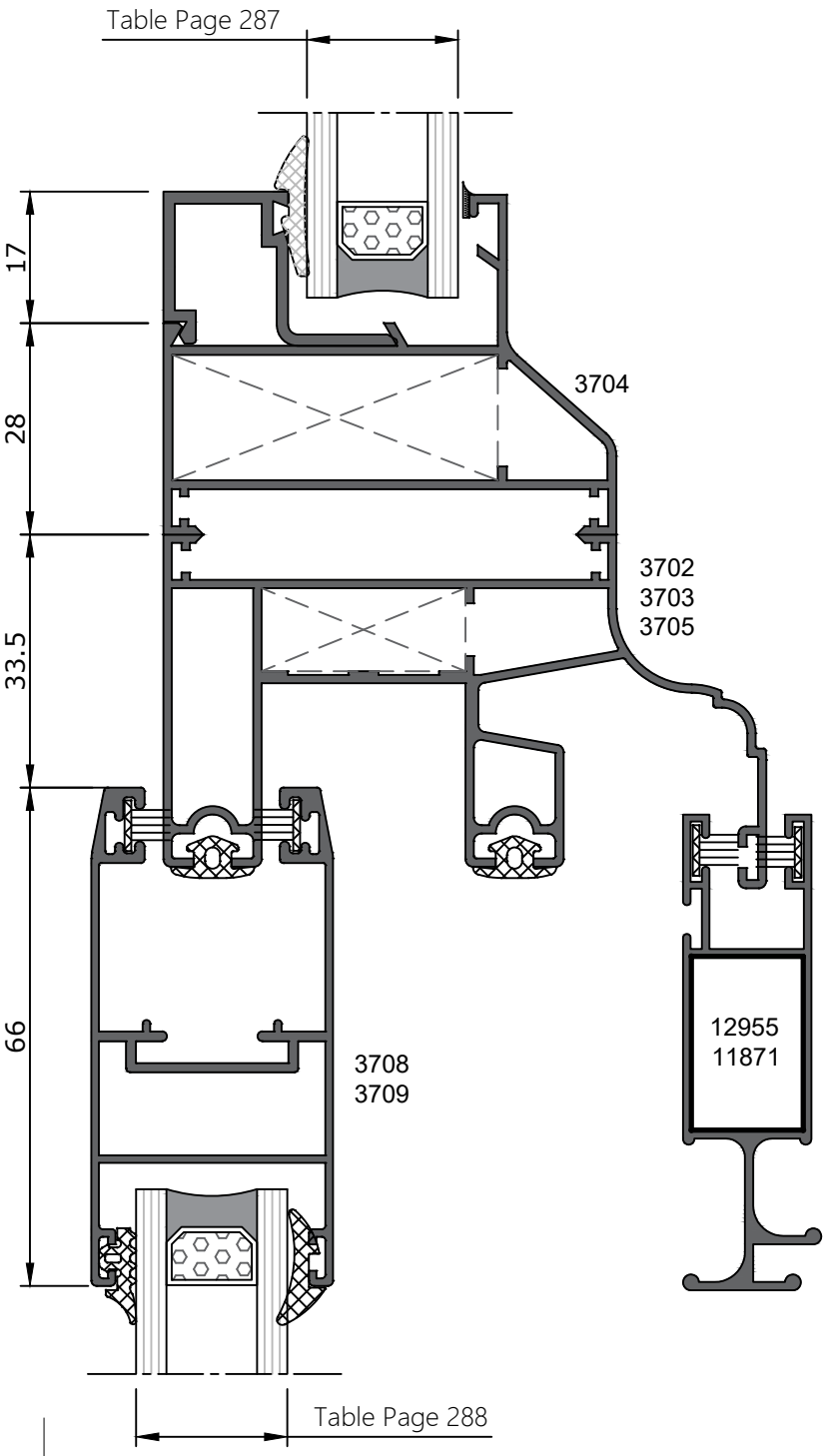
Table Page 287
17
28
33.5
66
3704
3702
3703
3705
3708
3709
12955
11871
Table Page 288

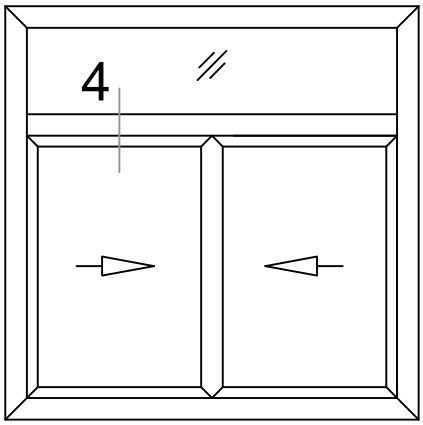
4

4

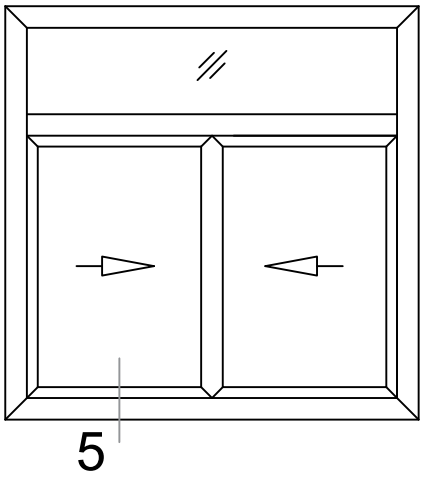

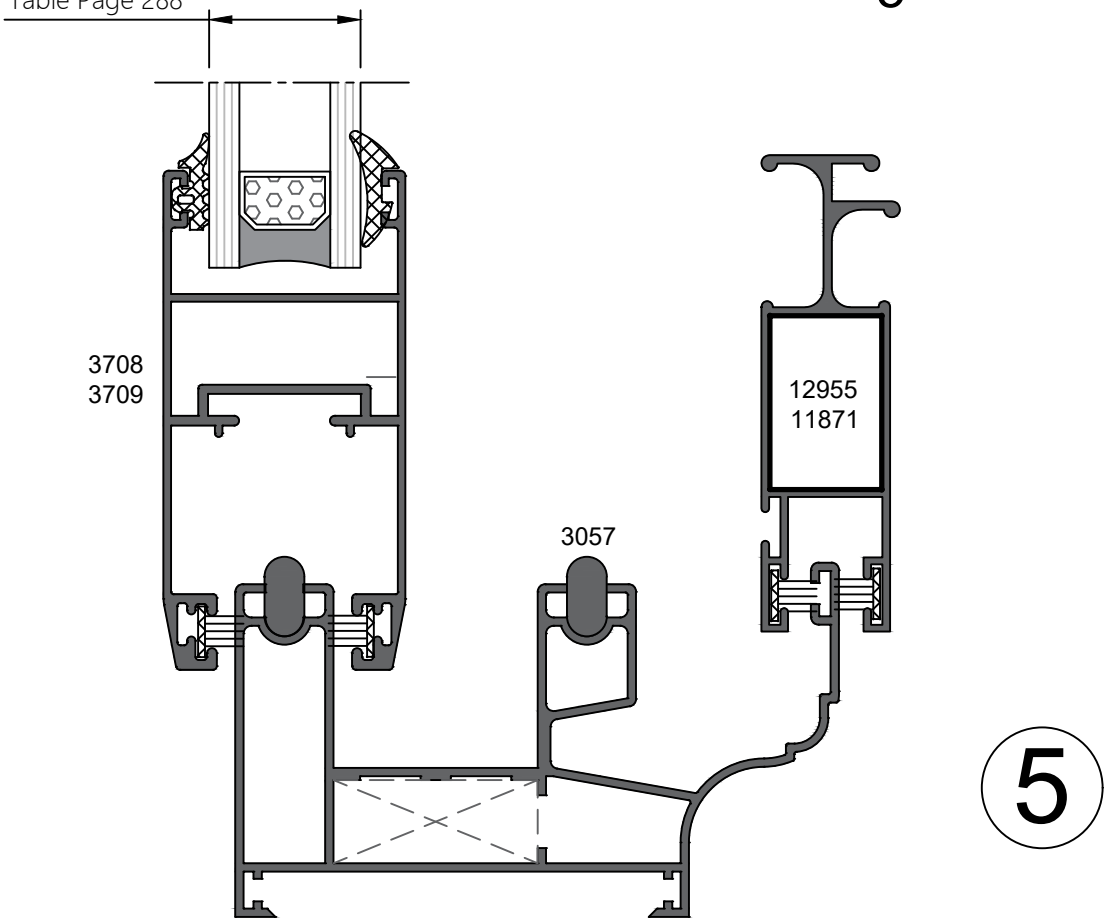
Table Page 288